www.dynamicpapers.com

Cambridge Assessment International Education

Cambridge IGCSE™ (9–1)

CANDIDATE NAME

CENTRE NUMBER | | | | | |

CANDIDATE NUMBER | | | | |

PHYSICS **0972/61**

Paper 6 Alternative to Practical **May/June 2023**

1 hour

You must answer on the question paper.

No additional materials are needed.

INSTRUCTIONS

- Answer **all** questions.
- Use a black or dark blue pen. You may use an HB pencil for any diagrams or graphs.
- Write your name, centre number and candidate number in the boxes at the top of the page.
- Write your answer to each question in the space provided.
- Do **not** use an erasable pen or correction fluid.
- Do **not** write on any bar codes.
- You may use a calculator.
- You should show all your working and use appropriate units.

INFORMATION

- The total mark for this paper is 40.
- The number of marks for each question or part question is shown in brackets [ ].

This document has **12** pages. Any blank pages are indicated.

DC (CE/SG) 327212
© UCLES 2023

[Turn over

www.dynamicpapers.com

1 A student investigates the balancing of a metre ruler.

Fig. 1.1 shows the set-up.

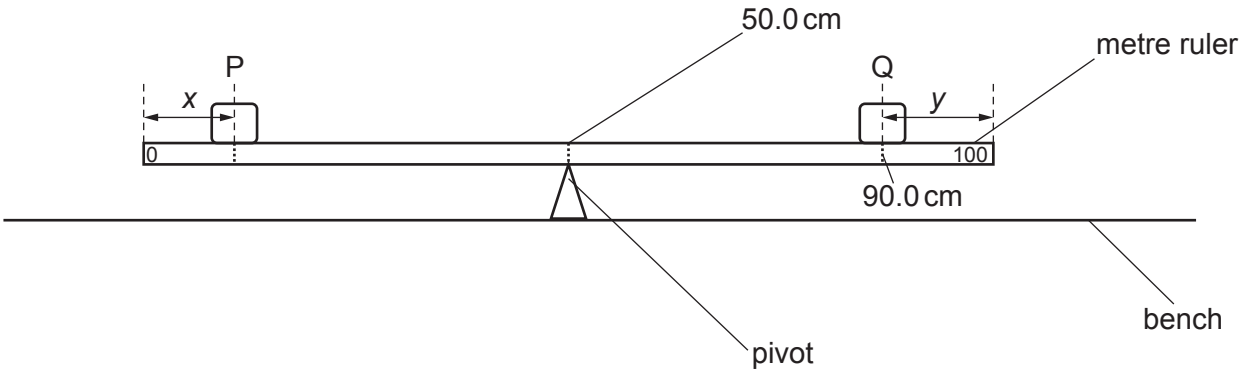

Fig. 1.1

(a) The student places the metre ruler on the pivot at the 50.0 cm mark with the scale of the ruler facing upwards.
He places an object Q with its centre on the metre ruler at the 90.0 cm mark.

Calculate the distance *y* from the centre of Q to the 100.0 cm end of the ruler.

y = ... cm [1]

(b) The student places a load P of weight *P* = 2.0 N on the metre ruler.

He adjusts the position of the load so that the metre ruler is as near as possible to being balanced. He measures the distance *x* from the centre of P to the zero end of the ruler.

He repeats the procedure using loads of weight *P* = 3.0 N, 4.0 N, 5.0 N and 6.0 N. The values of *P* and *x* are shown in Table 1.1.

Table 1.1

P / N	*x* / cm
2.0	10.2
3.0	23.1
4.0	30.0
5.0	33.8
6.0	36.8

Describe the main difficulty that a student has when doing this experiment as accurately as possible.

.....

.....

..... [1]

© UCLES 2023

www.dynamicpapers.com

(c) Plot a graph of P / N (y-axis) against x / cm (x-axis).

Draw the best-fit line.

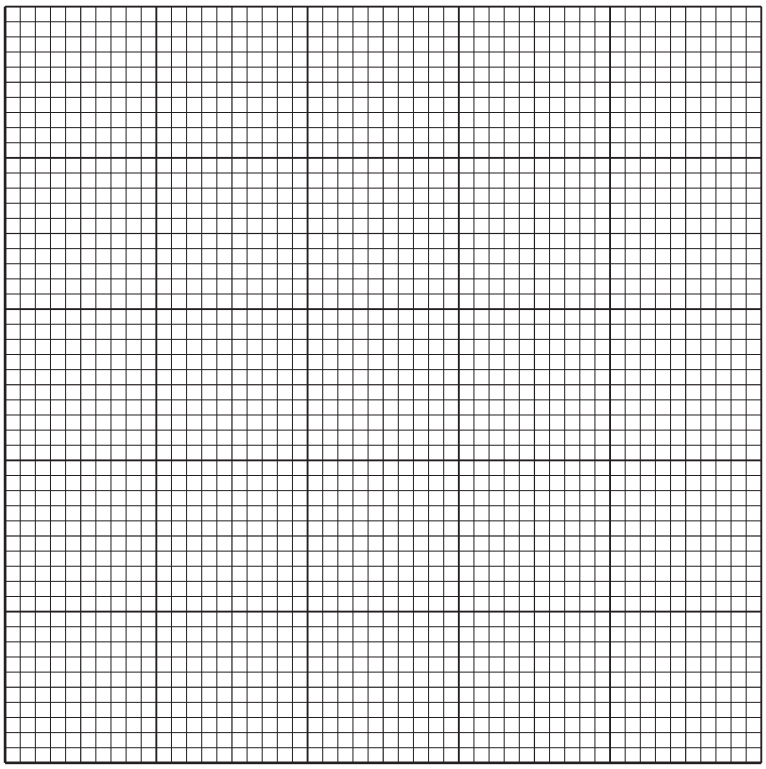

[4]

(d) Use the graph to find the value of x required to balance the ruler when $P = 3.5$ N. Show clearly on the graph how you determined the value of x.

x = ... [3]

(e) Using apparatus from Fig. 1.1, explain briefly how you would determine the position of the centre of mass of the ruler.

.....

..... [2]

[Total: 11]

© UCLES 2023

[Turn over

www.dynamicpapers.com

2 A student investigates the cooling of water under different conditions.

Fig. 2.1 shows the set-up.

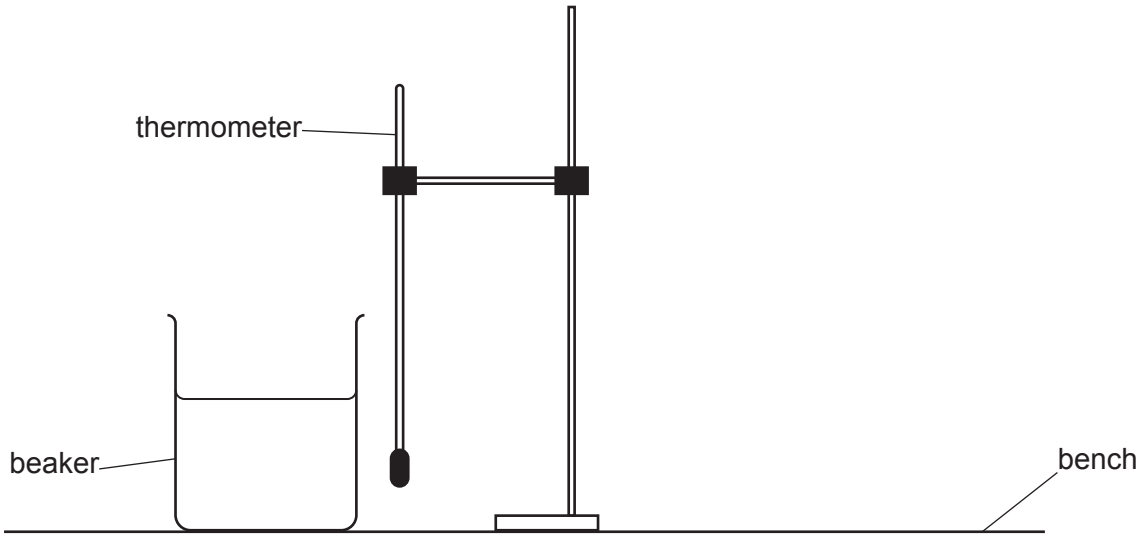

Fig. 2.1

(a) The thermometer in Fig. 2.2 shows the room temperature θ_R at the beginning of the experiment. Record θ_R.

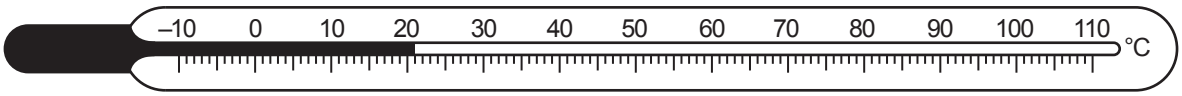

Fig. 2.2

θ_R = ... [1]

© UCLES 2023

www.dynamicpapers.com

(b) The student pours 200 cm^3 of hot water into the beaker.

She records the temperature θ of the hot water at time t = 0. She immediately starts a stop-watch.
She continues recording the temperature at 30 s intervals. The temperature readings are shown in Table 2.1.

(i) Complete the column headings in Table 2.1. [1]

(ii) Complete the first column of Table 2.1.

Table 2.1

t/	θ/
	92
	84
	78
	74
	71
	69
	67

[1]

(c) **(i)** Calculate the decrease in temperature $\Delta\theta$ between t = 0 and t = 180 s.

$\Delta\theta$ = ... [1]

(ii) Calculate the average rate of cooling R of the water using the equation $R = \frac{\Delta\theta}{\Delta t}$, where Δt = 180 s. Include the unit.

R = ... [2]

(d) A student states that the average rate of cooling of the water decreases as the temperature comes nearer to room temperature.

(i) Suggest **one** change to the experiment that you could make to test the statement.

.....

..... [1]

(ii) Suggest how to display the results to make it easier to see the trend in the rate of cooling.

.....

.....

..... [2]

© UCLES 2023

[Turn over

www.dynamicpapers.com

(e) Explain briefly why it is good practice to read the thermometer scale at right angles.

.....

..... [1]

(f) The student uses a measuring cylinder to measure 200 cm^3 of hot water. She reads the scale at right angles.

Suggest another precaution to obtain an accurate reading of the volume of the water.

.....

..... [1]

[Total: 11]

© UCLES 2023

www.dynamicpapers.com

3 A student investigates the refraction of light using a semicircular transparent block.

Fig. 3.1 and Fig. 3.2 show his ray-trace sheet.

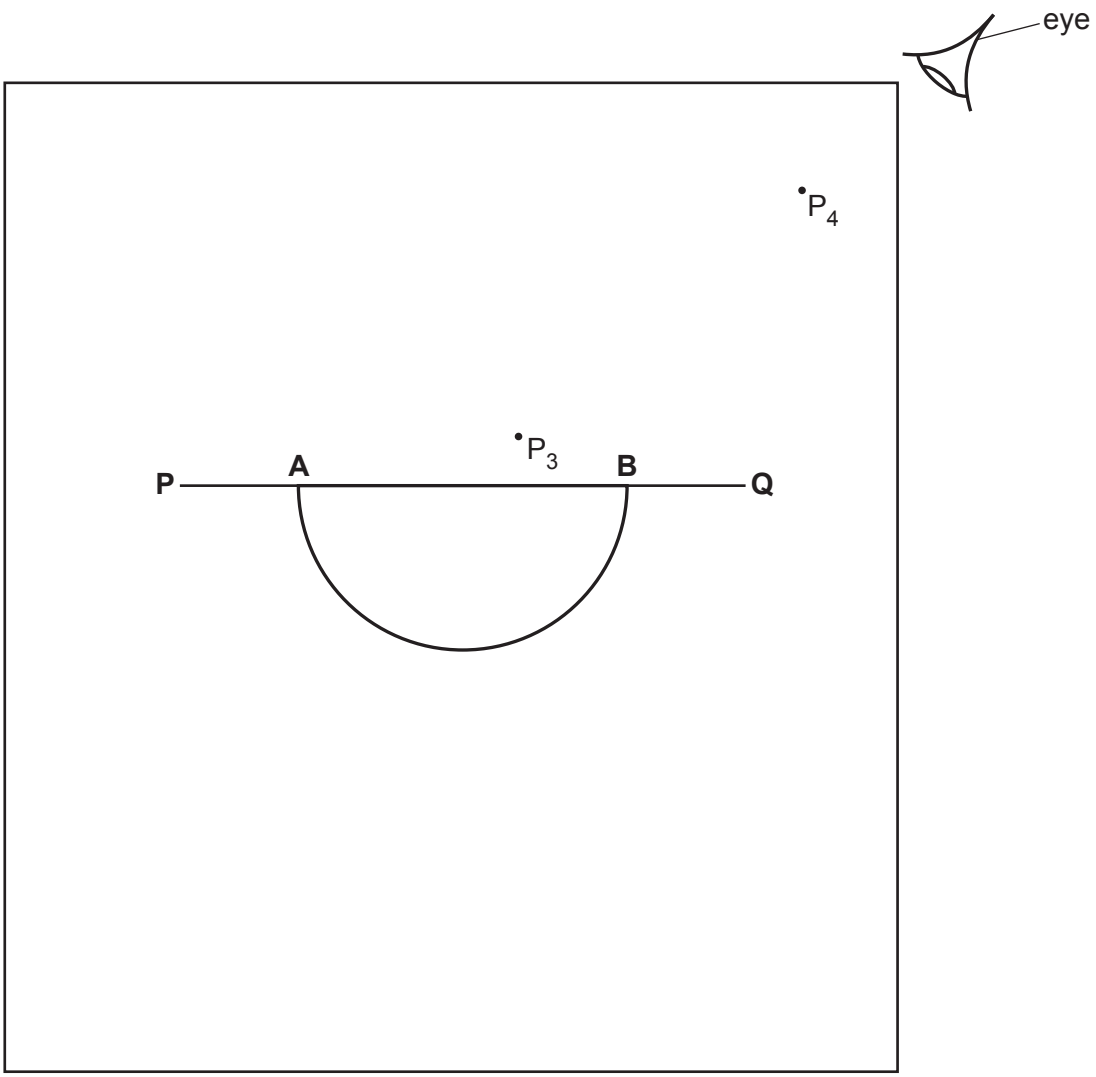

Fig. 3.1

(a)
- On Fig. 3.1, draw the normal **NL** through the centre of **AB**.
- Continue the normal so that it passes through the curved side of the block.
- Label the normal **NL**.
- Label the point **C** where the normal **NL** crosses **AB**.

[1]

(b) **(i)** Draw a line **DC**, below line **PC**, at an angle $i = 30°$ to the normal and to the left of the normal. [1]

(ii)
- Mark with neat crosses (X) the positions for two pins on line **DC** at a suitable distance apart for this type of ray-trace experiment.
- Label the positions P_1 and P_2.

[1]

© UCLES 2023

[Turn over

www.dynamicpapers.com

(c) The student looks from the position of the eye shown in Fig. 3.1, to observe the images of P_1 and P_2 through side **AB** of the block.
He adjusts his line of sight until the images of P_1 and P_2 appear one behind the other.

He places two pins, P_3 and P_4, between his eye and the block so that P_3, P_4, and the images of P_1 and P_2 seen through the block, appear one behind the other.

The positions of P_3 and P_4 are shown on Fig. 3.1.

(i)
- Draw a line joining the positions of P_3 and P_4. Continue the line to **AB**.
- Label **E**, the end of the line furthest from **AB**.

[1]

(ii) Measure the acute angle α between the line **NL** and the line **CE**. (An acute angle is less than 90°.)

α = ...° [2]

(d) State **one** precaution that you would take in order to produce an accurate ray trace.

.....

..... [1]

(e) The student moves the transparent block to a new position on the ray-trace sheet, as shown in Fig. 3.2.

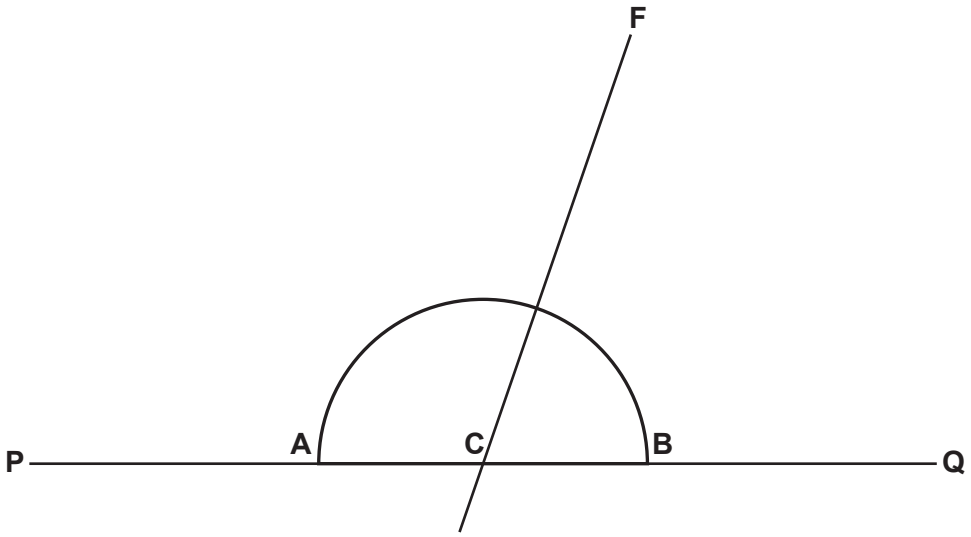

Fig. 3.2

He places pins P_1 and P_2 on line **DC** in the same positions used in **(b)(ii)**.
He observes the images of P_1 and P_2 through the curved side of the block.

He places pins P_5 and P_6 between his eye and the block so that P_5, P_6, and the images of P_1 and P_2 seen through the block, appear one behind the other.

He draws a line **CF** through the positions of P_5 and P_6.

(i) Measure the acute angle β between the line **AB** and the line **CF**. (An acute angle is less than 90°.)

β = ...° [1]

© UCLES 2023

www.dynamicpapers.com

(ii) Calculate the angle θ between line **CF** and the normal to line **AB**. Show your working.

θ = ...° [2]

(f) A student suggests that angle α should be equal to angle θ. State whether your results support the suggestion and justify your answer with reference to the results.

statement .....

justification .....

.....

..... [1]

[Total: 11]

www.dynamicpapers.com

4 A student investigates the change in resistance of a lamp filament when the current in the lamp is increased.

The following apparatus is available:

- a power supply
- a low-voltage filament lamp
- an ammeter
- a voltmeter
- connecting wires.

Other apparatus normally found in a school laboratory is also available.

Plan an experiment to investigate the change in resistance of the lamp filament when the current in the lamp is increased.

Resistance R is given by the equation $R = \frac{V}{I}$, where V is the potential difference (p.d.) across the lamp and I is the current in the lamp.

You should:

- draw a diagram of the circuit used
- explain briefly how to do the investigation, including how to change the current
- draw a table, or tables, with column headings, to show how to display your readings (you are **not** required to enter any readings in the table)
- explain how to use your readings to reach a conclusion.

© UCLES 2023

www.dynamicpapers.com

.....

.....

.....

.....

.....

.....

.....

.....

.....

.....

.....

.....

.....

.....

.....

.....

.....

..... [7]

www.dynamicpapers.com

BLANK PAGE

Permission to reproduce items where third-party owned material protected by copyright is included has been sought and cleared where possible. Every reasonable effort has been made by the publisher (UCLES) to trace copyright holders, but if any items requiring clearance have unwittingly been included, the publisher will be pleased to make amends at the earliest possible opportunity.

To avoid the issue of disclosure of answer-related information to candidates, all copyright acknowledgements are reproduced online in the Cambridge Assessment International Education Copyright Acknowledgements Booklet. This is produced for each series of examinations and is freely available to download at www.cambridgeinternational.org after the live examination series.

Cambridge Assessment International Education is part of Cambridge Assessment. Cambridge Assessment is the brand name of the University of Cambridge Local Examinations Syndicate (UCLES), which is a department of the University of Cambridge.

© UCLES 2023