www.dynamicpapers.com

Cambridge Assessment International Education

Cambridge IGCSE™ (9–1)

CANDIDATE NAME

CENTRE NUMBER | | | | | |

CANDIDATE NUMBER | | | | |

4560534549

PHYSICS **0972/41**

Paper 4 Theory (Extended) **May/June 2023**

1 hour 15 minutes

You must answer on the question paper.

No additional materials are needed.

INSTRUCTIONS

- Answer **all** questions.
- Use a black or dark blue pen. You may use an HB pencil for any diagrams or graphs.
- Write your name, centre number and candidate number in the boxes at the top of the page.
- Write your answer to each question in the space provided.
- Do **not** use an erasable pen or correction fluid.
- Do **not** write on any bar codes.
- You may use a calculator.
- You should show all your working and use appropriate units.
- Take the weight of 1.0 kg to be 9.8 N (acceleration of free fall = 9.8 m / s^2).

INFORMATION

- The total mark for this paper is 80.
- The number of marks for each question or part question is shown in brackets [ ].

This document has **20** pages. Any blank pages are indicated.

© UCLES 2023

[Turn over

www.dynamicpapers.com

1 Fig. 1.1 shows a straight section of a river where the water is flowing from right to left at a speed of 0.54 m / s.

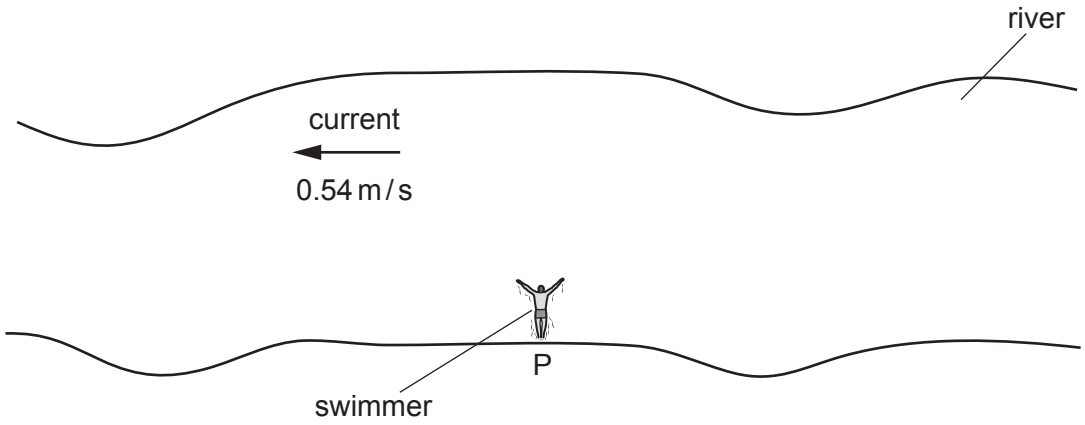

Fig. 1.1 (not to scale)

A swimmer starts at point P and swims at a constant speed of 0.72 m / s relative to the water and at right angles to the current.

(a) (i) Determine, relative to the river bank, both the magnitude and direction of the swimmer's velocity.

magnitude of velocity = ...

direction of velocity .....

[4]

(ii) After 1.5 minutes, the swimmer reaches point Q.

Calculate the distance between P and Q.

distance = ... [3]

© UCLES 2023

www.dynamicpapers.com

(b) When the swimmer is crossing the river, his actions produce a constant forward force on his body.

Explain why he moves at a constant speed.

.....

.....

.....

..... [2]

[Total: 9]

www.dynamicpapers.com

2 Fig. 2.1 shows a motorcyclist accelerating along a straight horizontal section of track.

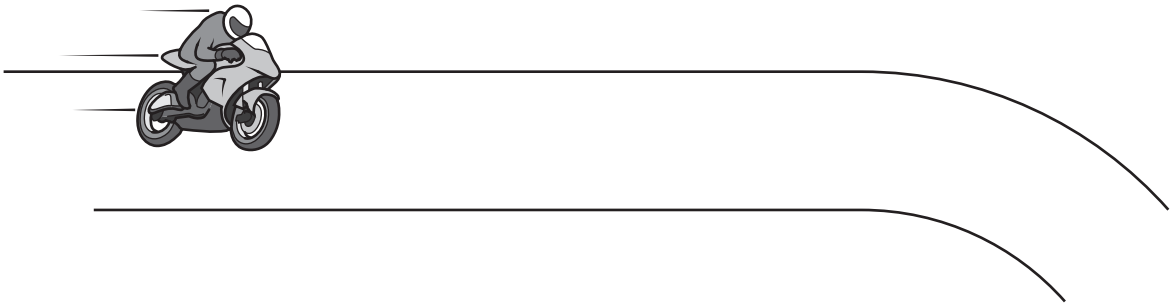

Fig. 2.1

The motorcyclist and motorcycle have a combined mass of 240 kg.

(a) On the straight horizontal section of the track, the motorcyclist accelerates from rest at $7.2\,m/s^2$.

(i) The motorcyclist reaches the end of the straight section of track in 5.3 s.

Calculate the speed of the motorcyclist at the end of the straight section.

speed = ... [2]

(ii) Calculate the resultant force on the motorcyclist and motorcycle on the straight section of track.

resultant force = ... [2]

© UCLES 2023

www.dynamicpapers.com

(b) At the end of the straight section, the track remains horizontal but bends to the right, as shown in Fig. 2.1.

When the motorcyclist reaches the bend, she travels around the bend in a circular path at a constant speed.

(i) Velocity is a vector quantity.

State how a vector quantity differs from a scalar quantity.

.....

..... [1]

(ii) Describe what happens to the velocity of the motorcyclist as she travels around the bend at constant speed.

.....

..... [1]

(iii) Explain why there must be a resultant force on the motorcyclist as she travels around the bend.

.....

.....

..... [2]

[Total: 8]

© UCLES 2023

[Turn over

www.dynamicpapers.com

3 A rubber balloon is inflated with helium and sealed so that no helium escapes.

The balloon is positioned immediately below the ceiling in a room.

Heaters are switched on and the temperature of the air in the room increases.

(a) When the heaters are first switched on, the temperature of the air immediately below the ceiling increases more quickly than the temperature of the air in the rest of the room.

Explain why this happens.

.....

.....

..... [2]

(b) The temperature of the helium in the balloon increases and as the rubber stretches, the volume occupied by the helium increases.

(i) State what happens to the motion of the helium particles as the temperature increases.

.....

..... [1]

(ii) As the rubber stretches and the volume of the helium increases, the pressure of the helium remains constant.

Explain, in terms of the particles of helium, how the pressure of the helium remains constant.

.....

.....

.....

..... [3]

[Total: 6]

© UCLES 2023

www.dynamicpapers.com

BLANK PAGE

www.dynamicpapers.com

4 A student investigates the efficiency of a filament lamp. Fig. 4.1 shows the filament lamp with its glass bulb immersed in water in a beaker.

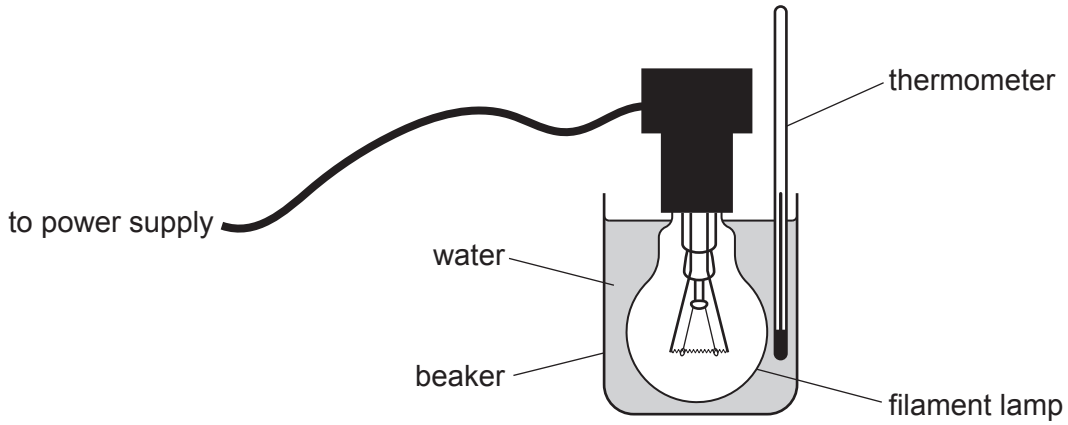

Fig. 4.1

The reading on the thermometer in the water is 19.0 °C.

Only the glass of the lamp is in contact with the water and the electrical connections are completely insulated.

The lamp is switched on.

At the end of the experiment, the temperature of the water is 21.5 °C.

(a) The mass of the water in the beaker is 600 g and the specific heat capacity of water is 4200 J / (kg °C).

(i) Show that the increase in the internal energy of the water is 6300 J.

[3]

(ii) In the experiment, the lamp is switched on for 500 s. The power supplied to the filament lamp is 13 W. The useful energy from the lamp is transferred as light. The energy that increases the temperature of the water is wasted energy.

Determine the maximum possible efficiency of the filament lamp.

maximum possible efficiency = ... [4]

© UCLES 2023

www.dynamicpapers.com

(b) The efficiency of the lamp is less than the value determined in **(a)(ii)**.

Suggest **one** reason for this.

.....

.....

..... [1]

[Total: 8]

www.dynamicpapers.com

5 Fig. 5.1 shows a block ABCD made of glass that has a refractive index of 1.5. The block has one curved side AB and three straight sides, BC, CD and DA.

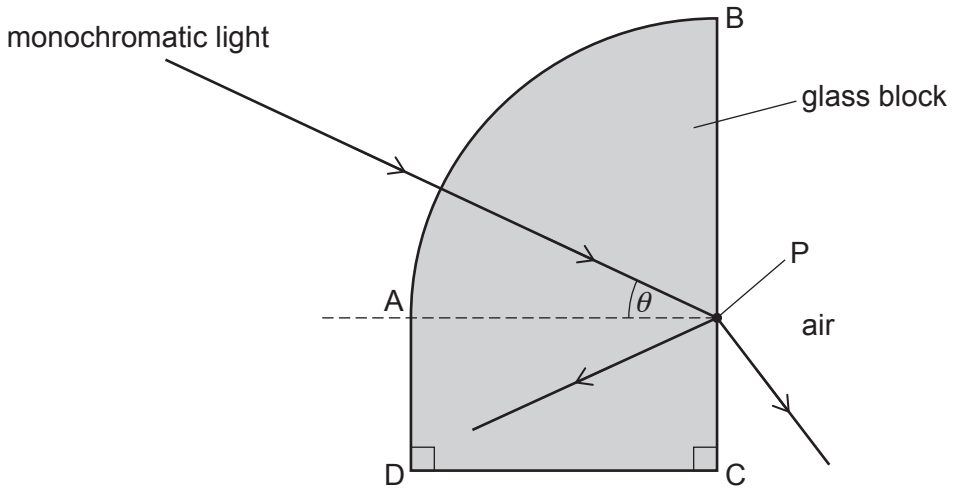

Fig. 5.1

There are right angles at C and D. The curved side AB is one quarter of the circumference of a circle that has its centre at point P.

A ray of monochromatic light enters the block through the curved side AB and strikes side BC at P. Some light emerges into the air and some is reflected.

(a) State what is meant by monochromatic.

.....

..... [1]

(b) Explain why the ray of light does **not** change direction when it enters the block through side AB.

.....

.....

..... [2]

(c) Show that the critical angle *c* for glass of refractive index 1.5 is 42°.

[2]

© UCLES 2023

www.dynamicpapers.com

(d) Fig. 5.1 shows that the angle between the ray of light and line AP is θ, where line AP is at right angles to side BC.

Angle θ increases to 45°.

(i) State and explain what happens to the light that strikes P.

.....

.....

..... [2]

(ii) When θ = 45°, the reflected light strikes side CD.

Describe what happens when this reflected light strikes side CD.

.....

..... [1]

[Total: 8]

www.dynamicpapers.com

6 A mobile phone (cell phone) network uses microwaves of frequency 1.9×10^9 Hz to transmit and receive signals.

The speed of microwaves in air is 3.0×10^8 m/s.

(a) Calculate the wavelength of these microwaves in air.

wavelength = ... [2]

(b) State **two** reasons why microwaves are used for mobile phone (cell phone) signals.

1 .....

.....

2 .....

.....
[2]

(c) All mobile phone (cell phone) networks use digital signals to communicate with the phone.

(i) Describe, with the aid of a diagram, how a digital signal differs from an analogue signal.

.....

.....

.....

..... [3]

(ii) State **two** advantages of using digital signals rather than analogue signals.

1 .....

.....

2 .....

.....
[2]

[Total: 9]

© UCLES 2023

www.dynamicpapers.com

7 Fig. 7.1 shows a circuit that contains a battery, a switch, a voltmeter and three 40 Ω resistors, R_1, R_2 and R_3.

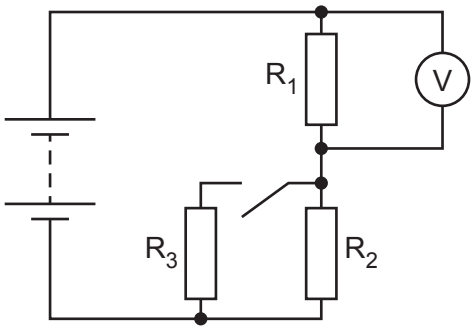

Fig. 7.1

The switch is open and resistors R_1 and R_2 form a potential divider.

(a) Describe what is meant by a potential divider.

.....

.....

..... [2]

(b) The reading on the voltmeter is 7.5 V.

(i) Calculate the electromotive force (e.m.f.) of the battery.

e.m.f. = ... [1]

(ii) The switch is closed.

Calculate the resistance of the complete circuit.

resistance = ... [3]

(c) Calculate the reading on the voltmeter when the switch is closed.

reading = ... [2]

[Total: 8]

© UCLES 2023

[Turn over

www.dynamicpapers.com

8 The electricity supplied to a town is transmitted using a high-voltage cable. A transformer in the town has a soft-iron core.

(a) Explain the principle of operation of a simple iron-cored transformer.

.....

.....

.....

.....

..... [4]

(b) The transformer steps the supply voltage down from 220 000 V to 33 000 V.

(i) There are 450 turns on the secondary coil.

Calculate the number of turns on the primary coil.

number of turns = ... [2]

(ii) The electrical power transferred to the transformer by the high-voltage cable is 77 MW.

Calculate the current in the primary coil.

current = ... [3]

[Total: 9]

© UCLES 2023

www.dynamicpapers.com

BLANK PAGE

www.dynamicpapers.com

9 Fig. 9.1 represents all the particles in a neutral atom of a radioactive isotope X1.

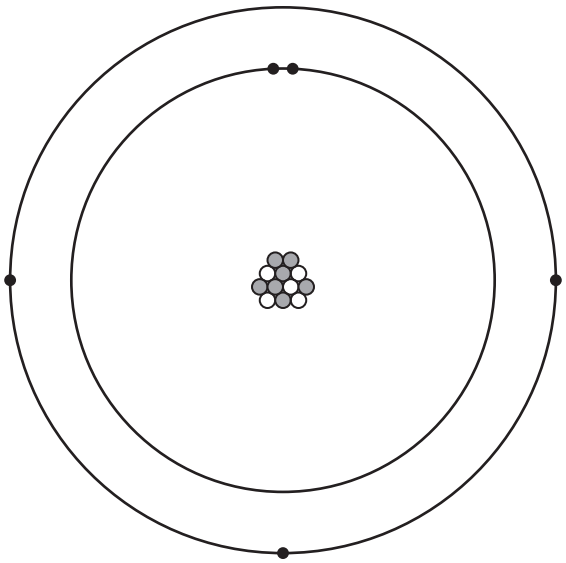

Fig. 9.1 (not to scale)

(a) Determine the number of neutrons in this atom and explain how the answer is obtained.

number of neutrons = ...

explanation

.....

.....

[2]

(b) The isotope X1 is a beta emitter that decays to the stable isotope X2.

(i) Describe how a nucleus of X2 differs from a nucleus of X1.

.....

..... [2]

(ii) Suggest why isotope X2 is stable whereas X1 is **not** stable.

.....

..... [1]

© UCLES 2023

www.dynamicpapers.com

(c) The half-life of X1 is approximately 20 ms.

(i) Define the term half-life.

.....

.....

..... [2]

(ii) Suggest **one** reason why isotopes with very short half-lives are especially hazardous.

.....

..... [1]

[Total: 8]

www.dynamicpapers.com

10 Pluto is a dwarf planet. Fig. 10.1 shows the direction of motion of Pluto as it follows its elliptical orbit around the Sun.

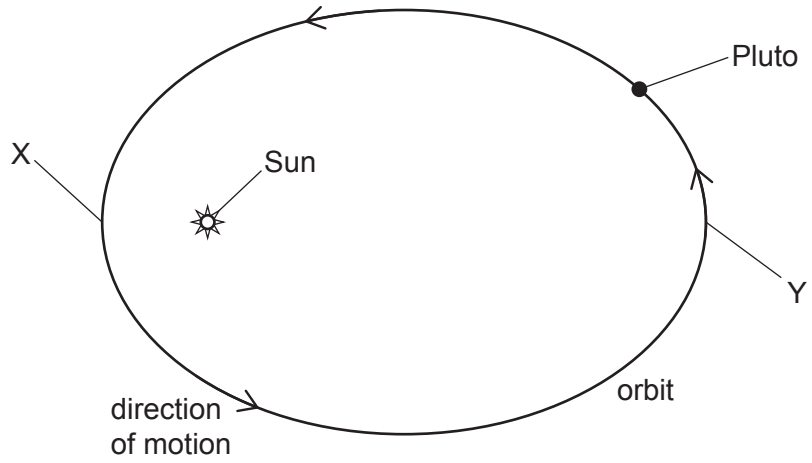

Fig. 10.1 (not to scale)

(a) Point X is the point in the orbit closest to the Sun and point Y is the point furthest away.

The orbital speed of Pluto varies as it orbits the Sun.

(i) Describe how the speed of Pluto varies as it moves from X to Y and then back to X.

.....

..... [1]

(ii) Explain, in terms of energy transfers, why the speed of Pluto varies in this way.

.....

.....

.....

..... [3]

© UCLES 2023

www.dynamicpapers.com

(b) The average temperature on the surface of Pluto is 43 K.

(i) Convert this temperature to a value in degrees Celsius (°C).

temperature = ... °C [1]

(ii) Pluto has a white surface, as shown in Fig. 10.2. As Pluto rotates, the white surface alternately faces towards and away from the Sun.

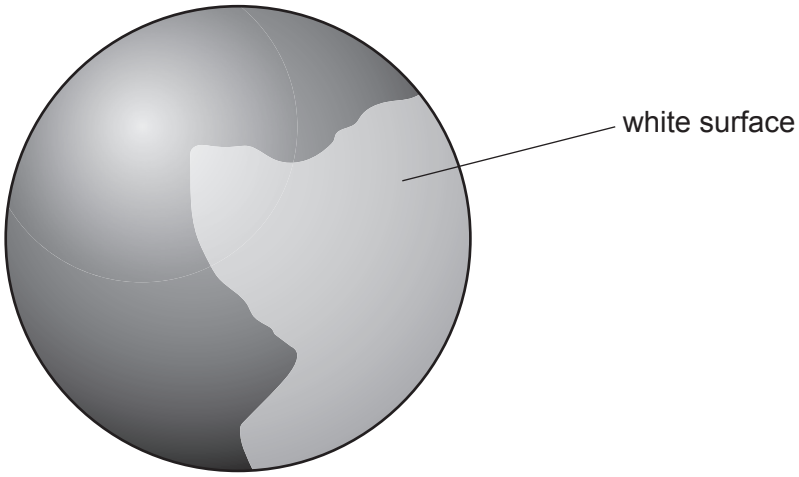

Fig. 10.2

Explain how this affects the temperature of Pluto as it rotates on its own axis.

.....

.....

.....

..... [2]

[Total: 7]

© UCLES 2023

www.dynamicpapers.com

BLANK PAGE

Permission to reproduce items where third-party owned material protected by copyright is included has been sought and cleared where possible. Every reasonable effort has been made by the publisher (UCLES) to trace copyright holders, but if any items requiring clearance have unwittingly been included, the publisher will be pleased to make amends at the earliest possible opportunity.

To avoid the issue of disclosure of answer-related information to candidates, all copyright acknowledgements are reproduced online in the Cambridge Assessment International Education Copyright Acknowledgements Booklet. This is produced for each series of examinations and is freely available to download at www.cambridgeinternational.org after the live examination series.

Cambridge Assessment International Education is part of Cambridge Assessment. Cambridge Assessment is the brand name of the University of Cambridge Local Examinations Syndicate (UCLES), which is a department of the University of Cambridge.

© UCLES 2023