* 0000800000001 * DFD

CAMBRIDGE
International Education

Cambridge IGCSE™

CANDIDATE NAME

CENTRE NUMBER

CANDIDATE NUMBER

6782639991

CO-ORDINATED SCIENCES **0654/31**

Paper 3 Theory (Core) **May/June 2026**

2 hours

You must answer on the question paper.

No additional materials are needed.

INSTRUCTIONS

- Answer **all** questions.
- Use a black or dark blue pen. You may use an HB pencil for any diagrams or graphs.
- Write your name, centre number and candidate number in the boxes at the top of the page.
- Write your answer to each question in the space provided.
- Do **not** use an erasable pen. Do **not** use correction fluid or tape.
- Do **not** write on any bar codes.
- You may use a calculator.
- You should show all your working and use appropriate units.
- Take the weight of 1.0 kg to be 9.8 N (acceleration of free fall = 9.8 m / s^2).

INFORMATION

- The total mark for this paper is 120.
- The number of marks for each question or part question is shown in brackets [ ].
- The Periodic Table is printed in the question paper.

This document has **28** pages.

DC (KAS/JG) 358087/3
© Cambridge University Press & Assessment 2026

1 Coordination of the body involves reflex arcs and reflex actions.

Figure 1.1 shows a reflex arc.

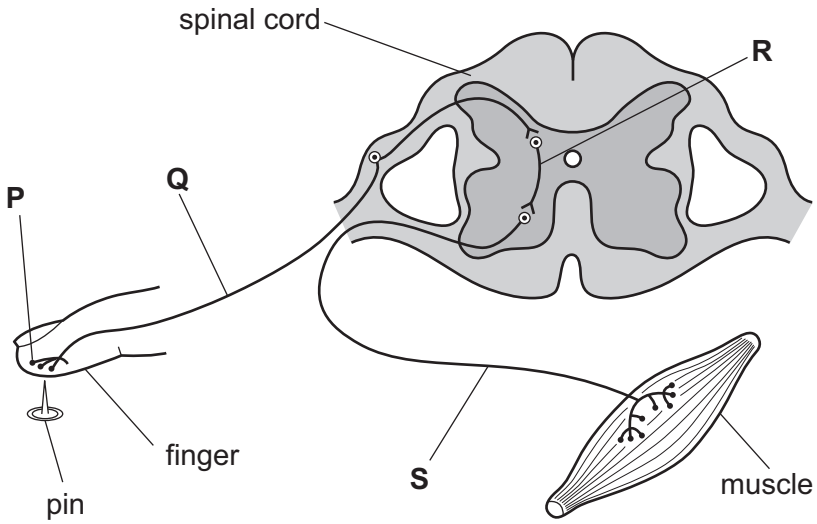

Figure 1.1

(a) (i) The spinal cord is part of the central nervous system.

State the **other** organ in the central nervous system.

..... [1]

(ii) Complete the flow chart, using letters **P**–**S** from Figure 1.1, to describe the reflex arc.

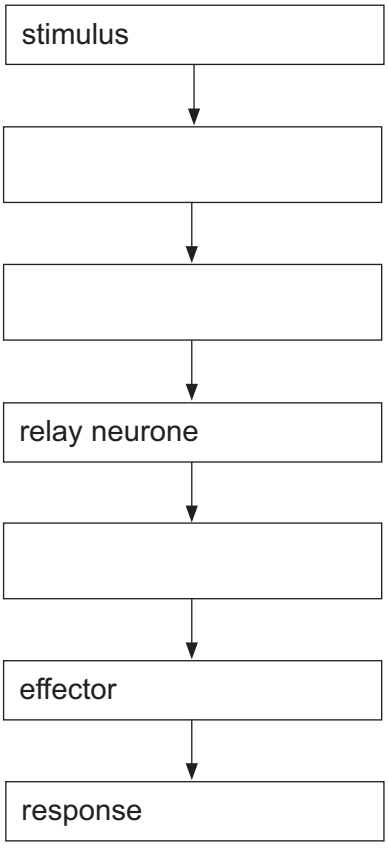

[2]

© Cambridge University Press & Assessment 2026

DO NOT WRITE IN THIS MARGIN
DO NOT WRITE IN THIS MARGIN
DO NOT WRITE IN THIS MARGIN
DO NOT WRITE IN THIS MARGIN
DO NOT WRITE IN THIS MARGIN

(iii) The muscle in Figure 1.1 uses energy to contract and move the finger.

State **two** other uses of energy in living organisms.

1 .....

2 .....

[2]

(b) (i) Place a tick (✓) in **all** the boxes which describe a reflex action.

automatic	☐
rapid	☐
slow	☐
transports water	☐
uses hormones	☐

[2]

(ii) The reflex action in Figure 1.1 is a response to pain.

Some substances taken into the body affect the chemical reactions and make the body feel less pain.

Circle the name of this type of substance.

bacteria

carbohydrate

drug

enzyme

[1]

(c) Sensitivity is one characteristic of living organisms.

Name and describe **two** other characteristics of living organisms.

name 1 .....

description 1 .....

.....

name 2 .....

description 2 .....

.....

[4]

[Total: 12]

DO NOT WRITE IN THIS MARGIN

2 **(a)** Eating a balanced diet is important for health.

Describe what is meant by a balanced diet.

.....

.....

..... [2]

(b) Table 2.1 shows the average daily intake of some different types of food eaten by people living in two countries, **A** and **B**.

Table 2.1

food type	average daily intake in country A / g	average daily intake in country B / g
cereals	381	299
vegetables	153	321
fruits	118	247
dairy	221	698
meat	38	338
eggs	4	43
fish	11	61
fats and oils	20	63
sugar	41	90

(i) State **two** good sources of fibre shown in Table 2.1.

..... and ..... [1]

(ii) The recommended average daily intake of meat is 90 g.

Compare the average daily intake of meat in country **B** with the recommended average daily intake.

.....

..... [2]

DO NOT WRITE IN THIS MARGIN

(iii) Country **A** has a higher risk of individuals developing scurvy than country **B**.

Use Table 2.1 to explain why.

.....

.....

..... [2]

(c) Fish is a good source of protein in the diet.

List **all** the chemical elements that make up proteins.

..... [1]

(d) Not all food ingested is digested and absorbed.

Name the process which is the removal of undigested food from the human body.

..... [1]

[Total: 9]

DO NOT WRITE IN THIS MARGIN

3 **(a)** Figure 3.1 shows a leaf.



Figure 3.1

Explain **one** way the shape of leaves is adapted for photosynthesis.

adaptation .....

explanation .....

.....

.....

[2]

DO NOT WRITE IN THIS MARGIN DO NOT WRITE IN THIS MARGIN DO NOT WRITE IN THIS MARGIN DO NOT WRITE IN THIS MARGIN DO NOT WRITE IN THIS MARGIN

(b) Figure 3.2 shows a cross-section of the cells in a leaf.

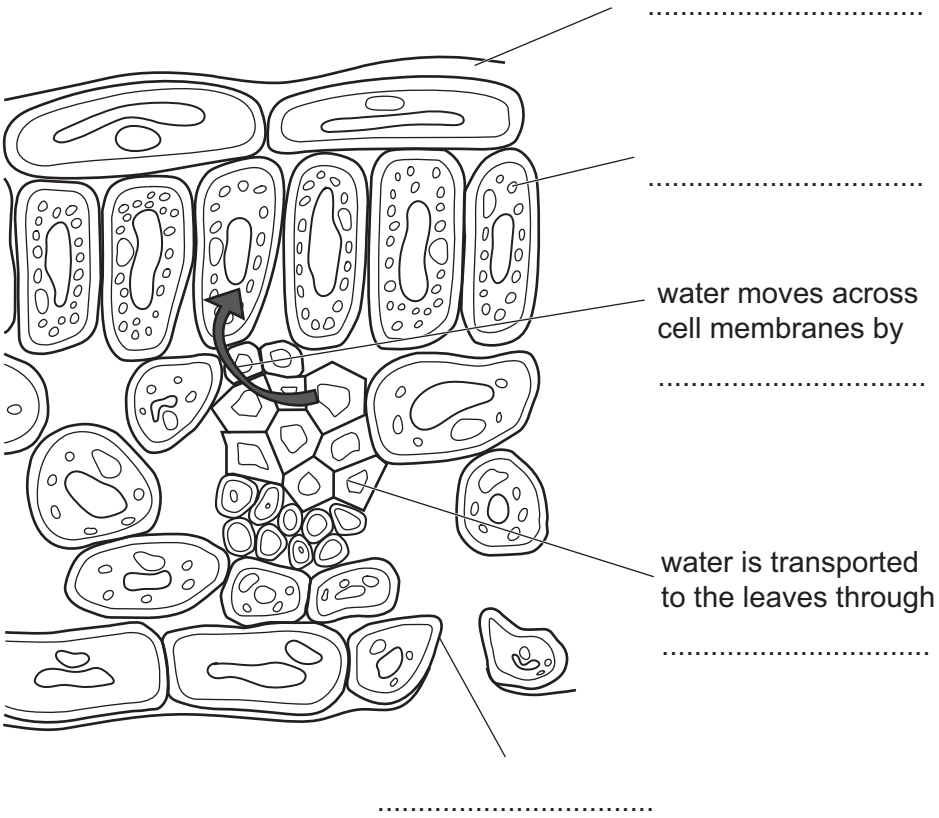

Figure 3.2

Choose words from the list to complete the labels in Figure 3.2.

active transport **chloroplast** **cuticle**

epidermis **guard cell** **osmosis**

phloem **stomata** **vacuole** **xylem**

[5]

(c) Leaves are adapted for gas exchange.

Complete the sentences.

Photosynthesis produces the gas ..... .

Gases move through air spaces in the leaf by ..... .

[2]

[Total: 9]

© Cambridge University Press & Assessment 2026

DO NOT WRITE IN THIS MARGIN
DO NOT WRITE IN THIS MARGIN
DO NOT WRITE IN THIS MARGIN
DO NOT WRITE IN THIS MARGIN
DO NOT WRITE IN THIS MARGIN

4 The pupfish is a small fish as shown in Figure 4.1.

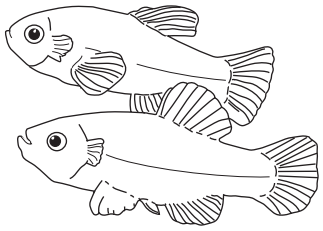

Figure 4.1

There are three different species of pupfish which live in different river systems:

- desert pupfish
- Sonoyta pupfish
- Bighead pupfish.

(a) The adult desert pupfish is on average 7.2 cm long.

Complete the sentence about body length.

Body length is an example of a phenotype with ..... variation. [1]

(b) Desert pupfish survive in extremes of pH and temperature.

They survive in water that has a temperature as low as 2 °C and as high as 45 °C.

(i) The desert pupfish genes have changed to allow them to survive in extreme conditions.

Complete the sentences to describe the changes to genes.

Choose words from the list.

alleles heterozygous monohybrids mutations offspring

Genetic changes are called ..... .

These genetic changes sometimes make new alternative forms of

genes called ..... .

[2]

(ii) The desert pupfish have specially adapted enzymes that function in this temperature range.

Describe what is meant by the term enzyme.

.....

.....

..... [2]

© Cambridge University Press & Assessment 2026

DO NOT WRITE IN THIS MARGIN DO NOT WRITE IN THIS MARGIN DO NOT WRITE IN THIS MARGIN DO NOT WRITE IN THIS MARGIN DO NOT WRITE IN THIS MARGIN

DO NOT WRITE IN THIS MARGIN
DO NOT WRITE IN THIS MARGIN
DO NOT WRITE IN THIS MARGIN
DO NOT WRITE IN THIS MARGIN
DO NOT WRITE IN THIS MARGIN

(c) Some species of pupfish are endangered.

(i) One reason they are endangered is habitat destruction.

Suggest **two** ways in which the pupfish habitat is being destroyed.

1 .....

2 .....

[2]

(ii) One other reason the pupfish are endangered is the introduction of new non-native species of fish into the pupfish habitat.

This is less of a problem where the water is at a high temperature or has an extreme pH.

Suggest why.

.....

.....

..... [1]

(iii) The Santa Cruz pupfish is extinct.

This affects the biodiversity of the area where it lived.

Suggest the effect on biodiversity of the extinction of the Santa Cruz pupfish.

Explain your answer.

.....

.....

..... [2]

[Total: 10]

5 **(a)** Draw **one** line from each process to its description.

process	description
chromatography	a method used to separate an insoluble solid from water
diffusion	a method using a burette to mix an acid with an alkali
filtration	a technique used to separate mixtures of soluble coloured substances
fractional distillation	the result of the constant random motion of particles
titration	used in the separation of petroleum into useful fractions

[4]

(b) Figure 5.1 shows apparatus used to investigate the rate of reaction between calcium carbonate and dilute hydrochloric acid.

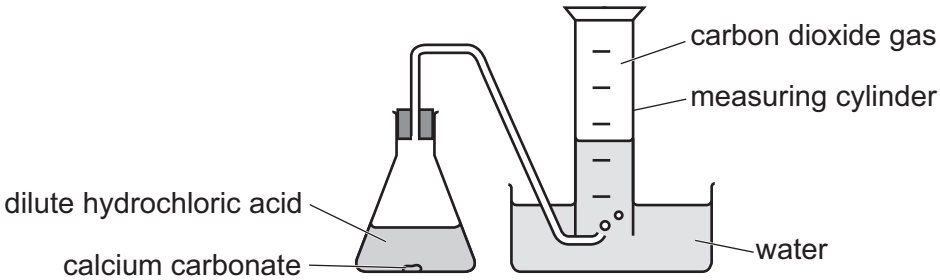

Figure 5.1

The reaction is done three times using the same mass of calcium carbonate and the same volume and concentration of dilute hydrochloric acid.

- Reaction 1 uses 20 small pieces of calcium carbonate.
- Reaction 2 uses 5 medium pieces of calcium carbonate.
- Reaction 3 uses 1 large piece of calcium carbonate.

A student measures the time taken for each reaction to finish.

The three times recorded are 200 s, 100 s and 50 s.

DO NOT WRITE IN THIS MARGIN
DO NOT WRITE IN THIS MARGIN
DO NOT WRITE IN THIS MARGIN
DO NOT WRITE IN THIS MARGIN
DO NOT WRITE IN THIS MARGIN

(i) Complete Table 5.1 to match the time taken for each reaction to finish with the reaction number.

Table 5.1

time taken for reaction to finish / s	reaction number
200	
100	
50	

[1]

(ii) In all three reactions, 96 cm^3 of carbon dioxide gas is collected.

Calculate the rate at which carbon dioxide gas is collected in the reaction that finished at 50 s.

rate = ... cm^3/s [1]

(iii) Describe the effect, if any, on the time taken for the reactions to finish if the concentration of the hydrochloric acid is increased.

.....

..... [1]

(c) Carbon dioxide gas is an acidic oxide.

Explain why carbon dioxide is an acidic oxide and **not** a basic oxide.

.....

..... [1]

(d) Calcium is in Group II and Period 4 of the Periodic Table.

(i) Describe the change in metallic character of the elements across Period 4 of the Periodic Table.

.....

..... [1]

(ii) State the number of electrons in the outer shell of a calcium atom.

number of electrons = ... [1]

[Total: 10]

DO NOT WRITE IN THIS MARGIN

6 **(a)** Draw the displayed formula of a molecule of methane, CH_4.

[2]

(b) State the type of chemical bonding in a molecule of methane.

..... [1]

(c) Methane is an alkane.

An alkane is a saturated hydrocarbon.

State how a saturated hydrocarbon differs from an unsaturated hydrocarbon.

.....

..... [1]

(d) The equation for the complete combustion of methane is shown.

$$CH_4\ (.....)\ +\ 2O_2\ (.....)\ \rightarrow\ CO_2\ (.....)\ +\ 2H_2O\ (g)$$

(i) Complete this equation by giving the state symbols. [1]

(ii) During this reaction, thermal energy is transferred to the surroundings.

State the name of the type of reaction that occurs during the complete combustion of methane.

..... [1]

DO NOT WRITE IN THIS MARGIN DO NOT WRITE IN THIS MARGIN DO NOT WRITE IN THIS MARGIN DO NOT WRITE IN THIS MARGIN DO NOT WRITE IN THIS MARGIN

(e) Methane is an air pollutant.

(i) State **one** effect of higher levels of methane in the atmosphere.

.....

..... [1]

(ii) The combustion of methane reduces the amount of methane but increases the amount of carbon dioxide in the atmosphere.

Describe **one** other strategy to reduce the amount of methane being released into the atmosphere.

.....

..... [1]

(f) Carbon and hydrogen are elements.

Methane is a compound.

Using only the words **elements** and **compounds**, complete the sentences.

..... are made from just one type of atom.

..... are made when two or more different ..... are chemically bonded together.

[1]

[Total: 9]

DO NOT WRITE IN THIS MARGIN
DO NOT WRITE IN THIS MARGIN
DO NOT WRITE IN THIS MARGIN
DO NOT WRITE IN THIS MARGIN
DO NOT WRITE IN THIS MARGIN

7 **(a)** Ice is a solid, water is a liquid and steam is a gas.

Figure 7.1 shows four changes of state, **A**, **B**, **C** and **D**.

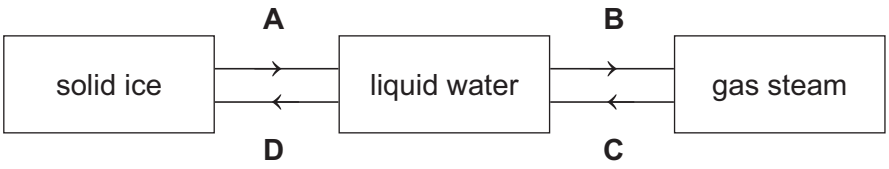

Figure 7.1

State the name given to each of the **four** changes of state **A**, **B**, **C** and **D**.

A .....

B .....

C .....

D .....

[2]

(b) A student measures the melting point of a sample of sea water.

The student finds that the melting point is between –2 °C and –3 °C.

State why the melting point is **not** 0 °C.

.....

..... [1]

DO NOT WRITE IN THIS MARGIN
DO NOT WRITE IN THIS MARGIN
DO NOT WRITE IN THIS MARGIN
DO NOT WRITE IN THIS MARGIN
DO NOT WRITE IN THIS MARGIN

DO NOT WRITE IN THIS MARGIN
DO NOT WRITE IN THIS MARGIN
DO NOT WRITE IN THIS MARGIN
DO NOT WRITE IN THIS MARGIN
DO NOT WRITE IN THIS MARGIN

(c) The treatment of the domestic water supply uses four processes: sedimentation, filtration, use of carbon and then chlorination.

Describe the purpose of **three** of these processes.

sedimentation

.....

.....

use of carbon

.....

.....

chlorination

.....

.....

[3]

(d) State the colour change observed when water is added to anhydrous cobalt(II) chloride.

from ..... to .....

[2]

(e) Iron rusts when exposed to water and a gaseous element.

Name this element.

..... [1]

(f) State the names of the **two** gaseous elements used in a fuel cell to produce electricity with water as the only chemical product.

..... and ..... [1]

[Total: 10]

8 **(a)** The formula of sulfuric acid is H_2SO_4.

Calculate the relative molecular mass M_r of sulfuric acid.

[A_r : H, 1; O, 16; S, 32]

relative molecular mass M_r = ... [2]

(b) Figure 8.1 shows the electrolysis of dilute sulfuric acid using inert electrodes.

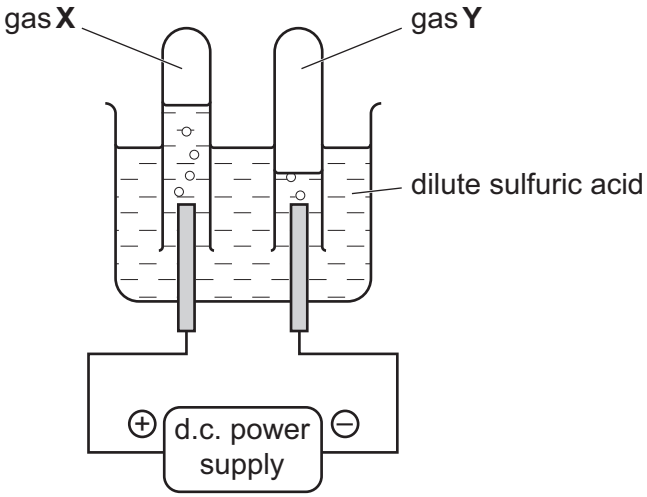

Figure 8.1

(i) Identify gas **X** and gas **Y**.

gas **X** .....

gas **Y** .....
[2]

(ii) State the name of the negative electrode.

..... [1]

(iii) Suggest a suitable material for use as the inert electrodes.

..... [1]

DO NOT WRITE IN THIS MARGIN

(c) Dilute sulfuric acid reacts with some metals.

(i) Suggest the pH of dilute sulfuric acid.

pH = ... [1]

(ii) Dilute sulfuric acid reacts with magnesium to produce magnesium sulfate and a gas.

This gas makes a squeaky pop with a lighted splint.

Construct the word equation for this reaction.

..... + ... → ..... + ...

[2]

(iii) State the name of **one** metal that does **not** react with dilute sulfuric acid.

Explain your answer with reference to the reactivity series.

metal .....

explanation .....

.....

[2]

[Total: 11]

DO NOT WRITE IN THIS MARGIN

9 **(a)** Five different types of power stations that generate electrical power are listed.

A geothermal

B fossil fuel

C hydroelectric

D tidal

E wind

(i) Identify **two** types of power station that use a renewable energy source.

..... and ..... [1]

(ii) Identify **one** type of power station that produces carbon dioxide when generating power.

..... [1]

(b) State the name of the process by which energy is obtained in a nuclear power station.

..... [1]

(c) The radioactive isotope strontium-90 is produced in a nuclear power station.

(i) A sample of strontium-90 has a mass of 2.0 g.

The half-life of strontium-90 is 29 years.

Calculate the mass of strontium-90 remaining after 116 years.

mass = ... g [2]

(ii) Strontium-90 decays by β-emission.

State the charge on a β-particle.

..... [1]

DO NOT WRITE IN THIS MARGIN DO NOT WRITE IN THIS MARGIN DO NOT WRITE IN THIS MARGIN DO NOT WRITE IN THIS MARGIN DO NOT WRITE IN THIS MARGIN

© Cambridge University Press & Assessment 2026

(iii) Use the words **electron**, **neutron** and **proton** to complete the sentence describing the change in the nucleus that occurs during β-emission.

One ..... changes into one ..... and one

..... . [1]

(iv) State the names of **two** other types of radiation emitted when radioactive isotopes decay.

..... and ..... [1]

(d) Radioactive materials are stored at a nuclear power station.

Suggest how the radioactive materials are stored safely.

.....

..... [1]

[Total: 9]

DO NOT WRITE IN THIS MARGIN

10 (a) Figure 10.1 shows an aircraft moving along a runway.

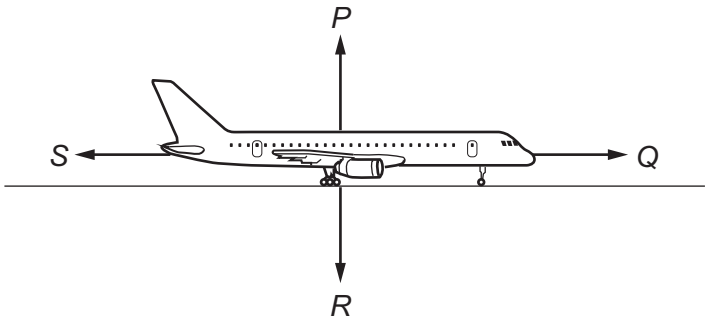

Figure 10.1

Four forces, *P*, *Q*, *R* and *S*, acting on the aircraft are shown.

(i) State which force, *P*, *Q*, *R* or *S*, is the weight of the aircraft.

force ..... [1]

(ii) The aircraft accelerates when force *Q* is greater than force *S*.

Explain why.

.....

..... [1]

(iii) The weight of the aircraft is 2 500 000 N.

Calculate the mass of the aircraft.

mass = ... kg [2]

DO NOT WRITE IN THIS MARGIN

(iv) The aircraft has 14 tyres.

Each tyre has an area of 0.050 m^2 in contact with the ground when the aircraft is on the runway.

The aircraft is **not** moving.

Calculate the pressure exerted by the aircraft on the runway.

pressure = ... N/m^2 [3]

(b) During a flight, the average speed of the aircraft is 195 m/s.

(i) Show that the average speed of the aircraft is about 700 km/h.

[1]

(ii) The aircraft travels at this speed for a distance of 5400 km.

Calculate the time taken, in hours, to travel this distance.

time = ... hours [2]

[Total: 10]

DO NOT WRITE IN THIS MARGIN

11 (a) Figure 11.1 shows a cooking hob with two hotplates.

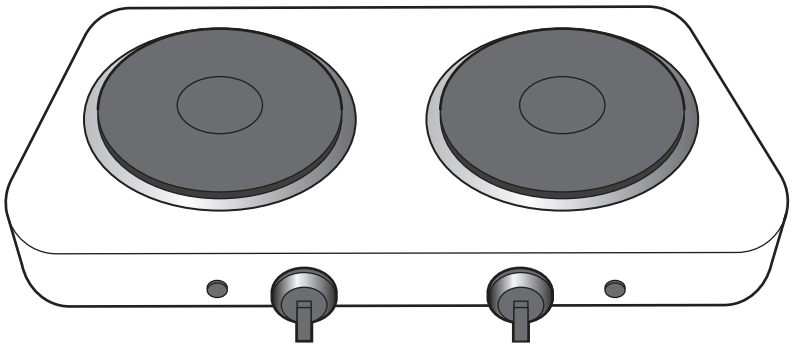

Figure 11.1

The two hotplates are connected in parallel with each other across an a.c. power supply.

Each hotplate has a separate switch.

(i) Draw the circuit diagram.

Use the symbol for a heater for each hotplate.

[3]

(ii) Each hotplate has a resistance of 50 Ω.

One value in the list is the correct value for the combined resistance of the two hotplates connected in parallel.

Circle this value and explain your answer.

25 Ω **50 Ω** **100 Ω** **2500 Ω**

explanation .....

.....

[2]

© Cambridge University Press & Assessment 2026

DO NOT WRITE IN THIS MARGIN DO NOT WRITE IN THIS MARGIN DO NOT WRITE IN THIS MARGIN DO NOT WRITE IN THIS MARGIN DO NOT WRITE IN THIS MARGIN

(b) Figure 11.2 shows water in a steel saucepan being heated by a hotplate.

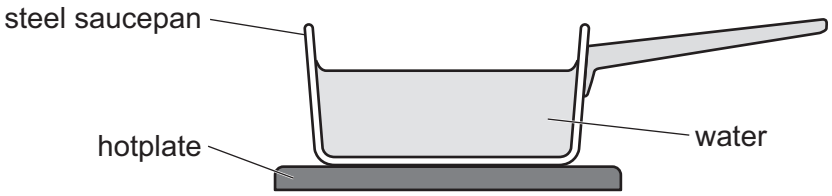

Figure 11.2

The water boils, and some of the water changes to steam.

(i) State the main method of thermal energy transfer through:

the saucepan .....

the water. .....

[2]

(ii) State the boiling point of water at standard atmospheric pressure.

boiling point = ... °C [1]

(iii) Figure 11.3 shows the three ways that particles are arranged in a solid, in a liquid and in a gas.

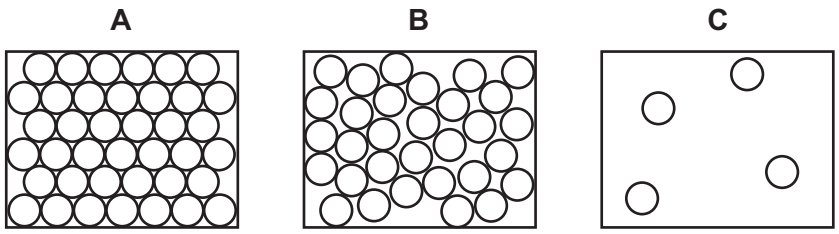

Figure 11.3

Identify the diagram that represents:

liquid water .....

gaseous steam. .....

[1]

DO NOT WRITE IN THIS MARGIN

(c) The saucepan is made from steel.

State **one** difference between the magnetic properties of magnets made from steel and magnets made from soft iron.

.....

.....

..... [1]

(d) The mass of steel used to make the saucepan is 0.60 kg.

The volume of the steel used to make the saucepan is $7.6 \times 10^{-5}\,m^3$.

Calculate the density of steel.

density = ... kg/m^3 [2]

[Total: 12]

DO NOT WRITE IN THIS MARGIN

DO NOT WRITE IN THIS MARGIN
DO NOT WRITE IN THIS MARGIN
DO NOT WRITE IN THIS MARGIN
DO NOT WRITE IN THIS MARGIN
DO NOT WRITE IN THIS MARGIN

Turn over

12 (a) A student sits on a beach on a sunny day.

The student is exposed to radiation emitted by the Sun.

The Sun radiates most of its energy in three regions of the electromagnetic spectrum.

Ultraviolet is one of the three regions.

(i) State the **two** other regions of the electromagnetic spectrum in which the Sun radiates most of its energy.

1 .....

2 .....

[2]

(ii) Describe **one** harmful effect on people of excessive exposure to ultraviolet radiation.

.....

..... [1]

(iii) State **one** useful application of ultraviolet radiation.

.....

..... [1]

(iv) Place ultraviolet radiation into the incomplete electromagnetic spectrum shown in Figure 12.1.

increasing frequency ←

gamma rays	X–rays				microwaves	

Figure 12.1

[1]

DO NOT WRITE IN THIS MARGIN

(b) The student watches the waves on the sea.

Figure 12.2 shows a displacement-distance graph for a water wave on the sea.

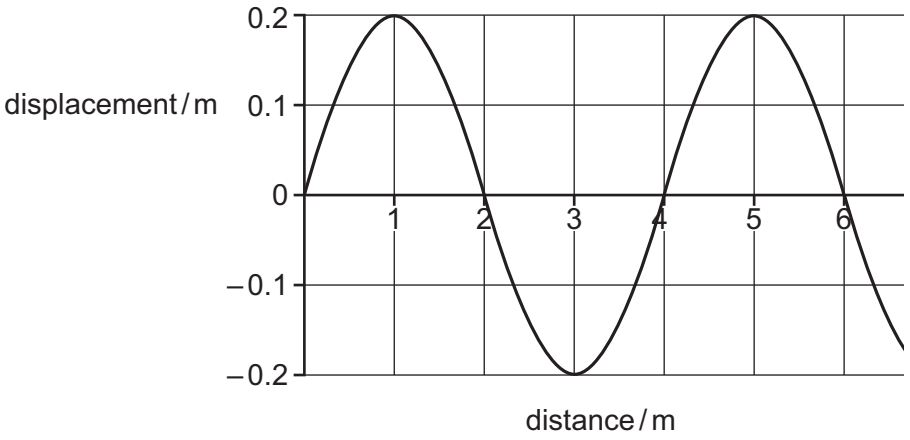

Figure 12.2

(i) Determine the amplitude and wavelength of the wave.

amplitude = ... m

wavelength = ... m

[2]

(ii) The water in the sea is warmed by the Sun.

Some water molecules evaporate.

Complete the sentence to describe the process of evaporation.

Evaporation is the escape of the more ..... particles

from the ..... of a liquid.

[2]

[Total: 9]

Permission to reproduce items where third-party owned material protected by copyright is included has been sought and cleared where possible. Every reasonable effort has been made by the publisher (Cambridge University Press & Assessment) to trace copyright holders, but if any items requiring clearance have unwittingly been included, the publisher will be pleased to make amends at the earliest possible opportunity.

To avoid the issue of disclosure of answer-related information to candidates, all copyright acknowledgements are reproduced online in our Copyright Acknowledgements Booklet. This is produced for each series of examinations and is freely available to download at www.cambridgeinternational.org after the live examination series.

Cambridge International Education is the name of our awarding body and a part of Cambridge University Press & Assessment, which is a department of the University of Cambridge.

© Cambridge University Press & Assessment 2026

DO NOT WRITE IN THIS MARGIN
DO NOT WRITE IN THIS MARGIN
DO NOT WRITE IN THIS MARGIN
DO NOT WRITE IN THIS MARGIN
DO NOT WRITE IN THIS MARGIN

© Cambridge University Press & Assessment 2026

The Periodic Table of Elements

Group I	Group II											Group III	Group IV	Group V	Group VI	Group VII	Group VIII
							1 H hydrogen 1										2 He helium 4
3 Li lithium 7	4 Be beryllium 9											5 B boron 11	6 C carbon 12	7 N nitrogen 14	8 O oxygen 16	9 F fluorine 19	10 Ne neon 20
11 Na sodium 23	12 Mg magnesium 24											13 Al aluminium 27	14 Si silicon 28	15 P phosphorus 31	16 S sulfur 32	17 Cl chlorine 35.5	18 Ar argon 40
19 K potassium 39	20 Ca calcium 40	21 Sc scandium 45	22 Ti titanium 48	23 V vanadium 51	24 Cr chromium 52	25 Mn manganese 55	26 Fe iron 56	27 Co cobalt 59	28 Ni nickel 59	29 Cu copper 64	30 Zn zinc 65	31 Ga gallium 70	32 Ge germanium 73	33 As arsenic 75	34 Se selenium 79	35 Br bromine 80	36 Kr krypton 84
37 Rb rubidium 85	38 Sr strontium 88	39 Y yttrium 89	40 Zr zirconium 91	41 Nb niobium 93	42 Mo molybdenum 96	43 Tc technetium –	44 Ru ruthenium 101	45 Rh rhodium 103	46 Pd palladium 106	47 Ag silver 108	48 Cd cadmium 112	49 In indium 115	50 Sn tin 119	51 Sb antimony 122	52 Te tellurium 128	53 I iodine 127	54 Xe xenon 131
55 Cs caesium 133	56 Ba barium 137	57–71 lanthanoids	72 Hf hafnium 178	73 Ta tantalum 181	74 W tungsten 184	75 Re rhenium 186	76 Os osmium 190	77 Ir iridium 192	78 Pt platinum 195	79 Au gold 197	80 Hg mercury 201	81 Tl thallium 204	82 Pb lead 207	83 Bi bismuth 209	84 Po polonium –	85 At astatine –	86 Rn radon –
87 Fr francium –	88 Ra radium –	89–103 actinoids	104 Rf rutherfordium –	105 Db dubnium –	106 Sg seaborgium –	107 Bh bohrium –	108 Hs hassium –	109 Mt meitnerium –	110 Ds darmstadtium –	111 Rg roentgenium –	112 Cn copernicium –	113 Nh nihonium –	114 Fl flerovium –	115 Mc moscovium –	116 Lv livermorium –	117 Ts tennessine –	118 Og oganesson –

Key

atomic number
atomic symbol
name
relative atomic mass

lanthanoids	57 La lanthanum 139	58 Ce cerium 140	59 Pr praseodymium 141	60 Nd neodymium 144	61 Pm promethium –	62 Sm samarium 150	63 Eu europium 152	64 Gd gadolinium 157	65 Tb terbium 159	66 Dy dysprosium 163	67 Ho holmium 165	68 Er erbium 167	69 Tm thulium 169	70 Yb ytterbium 173	71 Lu lutetium 175
actinoids	89 Ac actinium –	90 Th thorium 232	91 Pa protactinium 231	92 U uranium 238	93 Np neptunium –	94 Pu plutonium –	95 Am americium –	96 Cm curium –	97 Bk berkelium –	98 Cf californium –	99 Es einsteinium –	100 Fm fermium –	101 Md mendelevium –	102 No nobelium –	103 Lr lawrencium –

The volume of one mole of any gas is 24 dm^3 at room temperature and pressure (r.t.p.).

DO NOT WRITE IN THIS MARGIN DO NOT WRITE IN THIS MARGIN DO NOT WRITE IN THIS MARGIN DO NOT WRITE IN THIS MARGIN DO NOT WRITE IN THIS MARGIN