www.dynamicpapers.com

Cambridge Assessment International Education

Cambridge IGCSE™

COMBINED SCIENCE **0653/53**

Paper 5 Practical Test **October/November 2024**

CONFIDENTIAL INSTRUCTIONS

9002251006

This document gives details of how to prepare for and administer the practical exam.

The information in this document and the identity of any materials supplied by Cambridge International are confidential and must NOT reach candidates either directly or indirectly.

The supervisor must complete the report at the end of this document and return it with the scripts.

INSTRUCTIONS

- If you have any queries regarding these confidential instructions, contact Cambridge International stating the centre number, the syllabus and component number and the nature of the query.
  email info@cambridgeinternational.org
  phone +44 1223 553554

DC (CE/FC) 345429
© UCLES 2024

[Turn over

www.dynamicpapers.com

General information about practical exams

Centres must follow the guidance on science practical exams given in the *Cambridge Handbook*.

Safety

Supervisors must follow national and local regulations relating to safety and first aid.

Only those procedures described in the question paper should be attempted.

Supervisors must inform candidates that materials and apparatus used in the exam should be treated with caution. Suitable eye protection should be used where necessary.

The following hazard codes are used in these confidential instructions, where relevant:

C	corrosive	**MH**	moderate hazard
HH	health hazard	**T**	acutely toxic
F	flammable	**O**	oxidising
N	hazardous to the aquatic environment		

Hazard data sheets relating to substances used in this exam should be available from your chemical supplier.

Before the exam

- The packets containing the question papers must **not** be opened before the exam.
- It is assumed that standard school laboratory facilities, as indicated in the *Guide to Planning Practical Science*, will be available.
- Spare materials and apparatus for the tasks set must be available for candidates, if required.

During the exam

- It must be made clear to candidates at the start of the exam that they may request spare materials and apparatus for the tasks set.
- Where specified, the supervisor **must** perform the experiments and record the results as instructed. This must be done **out of sight** of the candidates, using the same materials and apparatus as the candidates.
- Any assistance provided to candidates must be recorded in the supervisor's report.
- If any materials or apparatus need to be replaced, for example, in the event of breakage or loss, this must be recorded in the supervisor's report.

After the exam

- The supervisor must complete a report for each practical session held and each laboratory used.
- Each packet of scripts returned to Cambridge International must contain the following items:
  - the scripts of the candidates specified on the bar code label provided
  - the supervisor's results relevant to these candidates
  - the supervisor's reports relevant to these candidates
  - seating plans for each practical session, referring to each candidate by candidate number
  - the attendance register.

© UCLES 2024

www.dynamicpapers.com

Specific information for this practical exam

During the exam, the supervisor (**not** the invigilator) must do the experiments in Questions 1, 3 and 4 and record the results on a spare copy of the question paper, clearly labelled 'supervisor's results'.

Apparatus and chemicals for Question 1

Each candidate will require the following materials and apparatus.

- half of an onion on a white tile (see Note 1.1)
- iodine solution with a dropper, labelled **iodine solution**

Notes

1.1 A red cooking onion should be cut in half and presented to candidates on a clean white tile. The onion should be cut in the orientation indicated in Fig. 1.1.

If red onions are unavailable, any cooking onions such as yellow onions or large shallots are suitable.



Fig. 1.1

Apparatus and chemicals for Question 2

No apparatus or chemicals are required for this question.

© UCLES 2024

www.dynamicpapers.com

Apparatus and chemicals for Question 3

Each candidate will require the following materials and apparatus. Labels do **not** need to include concentrations.

- 3.5 g of basic zinc carbonate, $ZnCO_3$, in a stoppered sample bottle, labelled **solid H**

[C]

- 10 cm^3 of 1.0 mol / dm^3 nitric acid labelled **dilute nitric acid**

[MH]

- 10 cm^3 of limewater labelled **limewater**
- apparatus that the centre uses to test for carbon dioxide
- red and blue litmus paper
- 3 × wooden splints
- Bunsen burner and a means to light it
- laboratory mat
- test-tube holder
- spatula
- balance that measures to at least 0.1 g (see Note 3.1)
- 2 × hard glass test-tubes (approximately 125 mm × 16 mm)
- 1 × stop-watch or stop-clock (see Note 3.2)

Notes

3.1 The candidates will use the balance to measure the mass of a test-tube on three separate occasions.

3.2 Alternatively, candidates need sight of a clock with a second hand.

© UCLES 2024

www.dynamicpapers.com

Apparatus and chemicals for Question 4

Each candidate will require the following materials and apparatus.

- 2 × clamps, bosses and stands (see Note 4.1)
- 3 × identical expendable springs. Spare springs should be available (see Note 4.2)
- metre rule graduated in mm (see Note 4.3)
- set square (see Note 4.1)
- 1 × 50 g mass hanger and 5 × 50 g slotted masses, with each slotted mass labelled **0.5 N** (see Note 4.4)

Notes

4.1 The apparatus is to be set up for the candidates as shown in Fig. 4.1. Two springs are to be suspended from the clamp in series, supported by a boss and stand. The springs must be sufficiently high above the laboratory bench so that when the mass hanger plus a 250 g load is suspended from the springs, the bottom of the mass hanger is at least 10 cm above the surface of the bench (to allow space for the set square). The set square and the third spring should be placed on the bench next to the bottom of the metre rule.

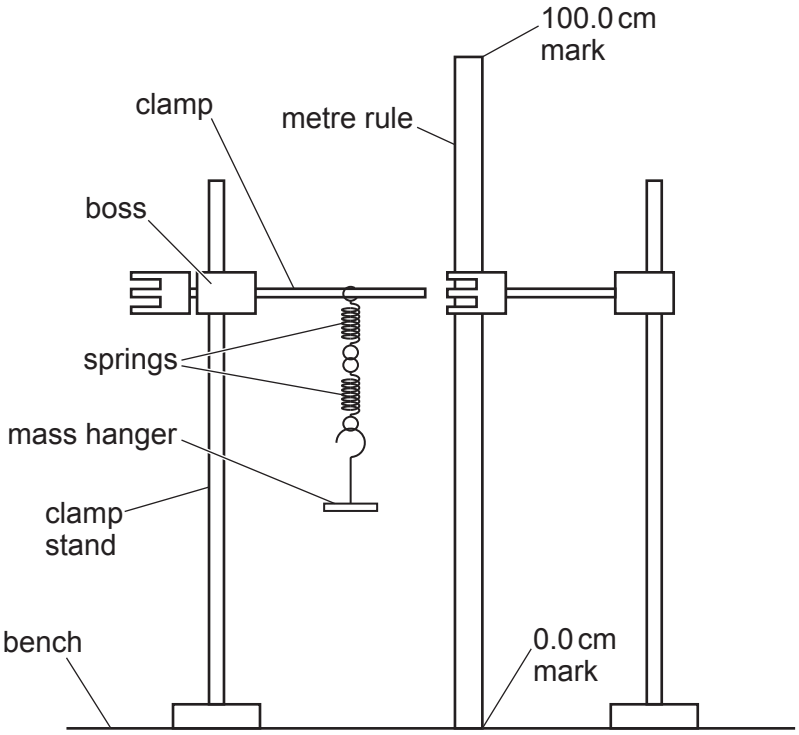

Fig. 4.1

4.2 Expendable springs capable of supporting at least 300 g without overstretching, approximately 50–55 mm overall length (including loops), 15 mm diameter, with spring constant 20–25 N/m.

© UCLES 2024

www.dynamicpapers.com

4.3 The metre rule (supported by a clamp, boss and stand) must be next to, but not touching or directly behind, the springs and mass hanger. The 0 cm end of the metre rule must be touching the bench. The metre rule must be vertical and perpendicular to the bench.

4.4 An alternative to individually labelling the masses is to provide a card with the words 'each mass has a weight of 0.5 N'. If slotted masses are not available, a light hook must be provided so that up to five 50 g masses each labelled **0.5 N** can be suspended from the springs. The 50 g mass hanger must **not** be labelled.

Action at changeover

Check that the apparatus is set up ready for the next candidate, as shown in Fig. 4.1, with the springs near to the metre rule. Replace the springs if they have been overstretched.

Permission to reproduce items where third-party owned material protected by copyright is included has been sought and cleared where possible. Every reasonable effort has been made by the publisher (UCLES) to trace copyright holders, but if any items requiring clearance have unwittingly been included, the publisher will be pleased to make amends at the earliest possible opportunity.

To avoid the issue of disclosure of answer-related information to candidates, all copyright acknowledgements are reproduced online in the Cambridge Assessment International Education Copyright Acknowledgements Booklet. This is produced for each series of examinations and is freely available to download at www.cambridgeinternational.org after the live examination series.

Cambridge Assessment International Education is part of Cambridge Assessment. Cambridge Assessment is the brand name of the University of Cambridge Local Examinations Syndicate (UCLES), which is a department of the University of Cambridge.

© UCLES 2024

www.dynamicpapers.com

Supervisor's report

Syllabus and component number | | | | | / | | |

Centre number | | | | | |

Centre name .....

Time of the practical session .....

Laboratory name/number .....

Give details of any difficulties experienced by the centre or by candidates (include the relevant candidate names and candidate numbers).

You must include:
- any difficulties experienced by the centre in the preparation of materials
- any difficulties experienced by candidates, e.g. due to faulty materials or apparatus
- any specific assistance given to candidates.

© UCLES 2024

[Turn over

www.dynamicpapers.com

Space for supervisor to record results, if relevant, e.g. temperature of the laboratory; results for Question 1.

Declaration

1 Each packet that I am returning to Cambridge International contains all of the following items:
- the scripts of the candidates specified on the bar code label provided
- the supervisor's results relevant to these candidates
- the supervisor's reports relevant to these candidates
- seating plans for each practical session, referring to each candidate by candidate number
- the attendance register.

2 Where the practical exam has taken place in more than one practical session, I have clearly labelled the supervisor's results, supervisor's reports and seating plans with the time and laboratory name/number for each practical session.

3 I have included details of difficulties relating to each practical session experienced by the centre or by candidates.

4 I have reported any other adverse circumstances affecting candidates, e.g. illness, bereavement or temporary injury, directly to Cambridge International on a *special consideration form*.

Signed ..... (supervisor)

Name (in block capitals) .....

© UCLES 2024