www.dynamicpapers.com

Cambridge Assessment International Education

Cambridge IGCSE™

COMBINED SCIENCE **0653/51**

Paper 5 Practical Test **October/November 2022**

CONFIDENTIAL INSTRUCTIONS



This document gives details of how to prepare for and administer the practical exam.

The information in this document and the identity of any materials supplied by Cambridge International are confidential and must NOT reach candidates either directly or indirectly.

The supervisor must complete the report at the end of this document and return it with the scripts.

INSTRUCTIONS

- If you have any queries regarding these confidential instructions, contact Cambridge International stating the centre number, the syllabus and component number and the nature of the query.
  email info@cambridgeinternational.org
  phone +44 1223 553554

DC (CE/FC) 307259/2
© UCLES 2022

[Turn over

www.dynamicpapers.com

General information about practical exams

Centres must follow the guidance on science practical exams given in the *Cambridge Handbook*.

Safety

Supervisors must follow national and local regulations relating to safety and first aid.

Only those procedures described in the question paper should be attempted.

Supervisors must inform candidates that materials and apparatus used in the exam should be treated with caution. Suitable eye protection should be used where necessary.

The following hazard codes are used in these confidential instructions, where relevant:

C	corrosive	**MH**	moderate hazard
HH	health hazard	**T**	acutely toxic
F	flammable	**O**	oxidising
N	hazardous to the aquatic environment		

Hazard data sheets relating to substances used in this exam should be available from your chemical supplier.

Before the exam

- The packets containing the question papers must **not** be opened before the exam.
- It is assumed that standard school laboratory facilities, as indicated in the *Guide to Planning Practical Science*, will be available.
- Spare materials and apparatus for the tasks set must be available for candidates, if required.

During the exam

- It must be made clear to candidates at the start of the exam that they may request spare materials and apparatus for the tasks set.
- Where specified, the supervisor **must** perform the experiments and record the results as instructed. This must be done **out of sight** of the candidates, using the same materials and apparatus as the candidates.
- Any assistance provided to candidates must be recorded in the supervisor's report.
- If any materials or apparatus need to be replaced, for example, in the event of breakage or loss, this must be recorded in the supervisor's report.

After the exam

- The supervisor must complete a report for each practical session held and each laboratory used.
- Each packet of scripts returned to Cambridge International must contain the following items:
  - the scripts of the candidates specified on the bar code label provided
  - the supervisor's results relevant to these candidates
  - the supervisor's reports relevant to these candidates
  - seating plans for each practical session, referring to each candidate by candidate number
  - the attendance register.

© UCLES 2022

www.dynamicpapers.com

Specific information for this practical exam

During the exam, the supervisor (**not** the invigilator) must do the experiments in Questions 1, 2 and 4 and record the results on a spare copy of the question paper, clearly labelled 'supervisor's results'.

Apparatus and chemicals for Question 1

Each candidate will require the following materials and apparatus.

- 50 cm^3 of yeast suspension in a beaker labelled **yeast** (see note 1)
- flexible delivery tube with bung attached at one end (to fit boiling tube) and 10 cm^3 syringe barrel attached at the other end (see note 2)
- transparent container such as a clear plastic bowl or large 600 cm^3 beaker to contain the 10 cm^3 syringe barrel (see note 2)
- 2 × boiling tubes (approximately 150 mm × 25 mm)
- 10 cm^3 syringe
- a means to support two boiling tubes such as a test-tube rack or large beaker
- empty 250 cm^3 beaker labelled **warm water** (see note 3)
- 250 cm^3 beaker half-filled with cold tap water labelled **cold water**
- glass (stirring) rod
- stop-clock
- paper towels
- thermometer, –10 °C to 110 °C with 1 °C graduations

Notes

1. The yeast suspension should be prepared shortly before the exam by mixing 10 g instant yeast with 1 g sugar and 50 cm^3 of warm water (approximately 25 °C to 30 °C).

© UCLES 2022

www.dynamicpapers.com

2. Each candidate will need the following apparatus prepared:

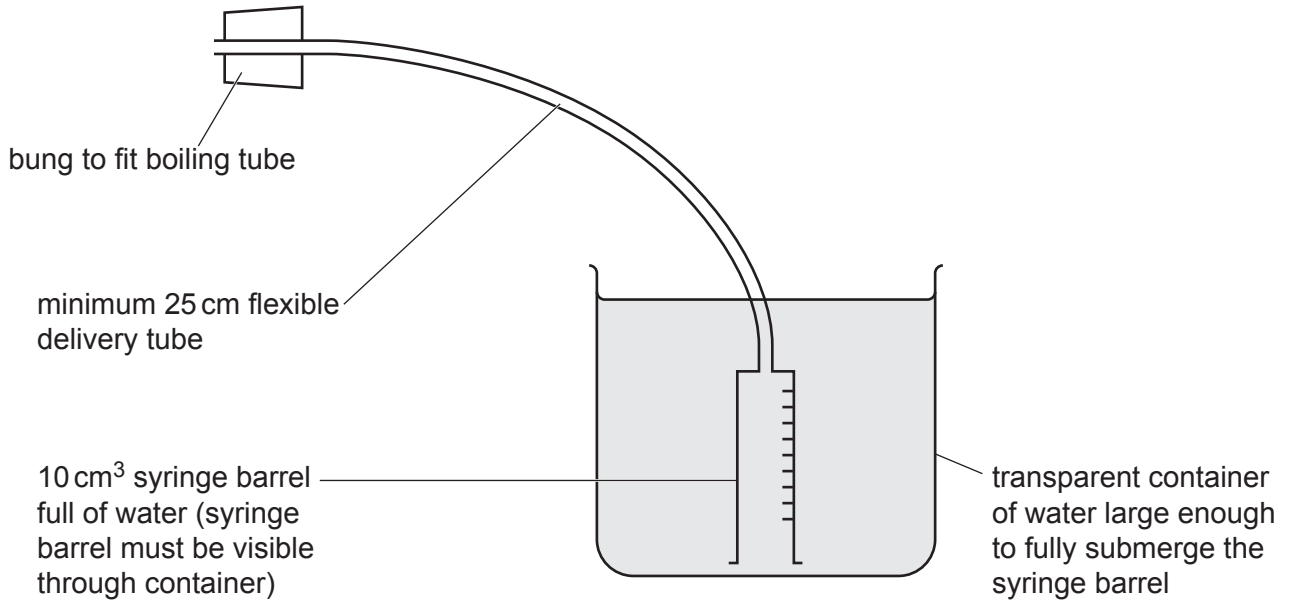

3. Each candidate will require warm water at approximately 35–45 °C, to be supplied on request. This should be added to the beaker labelled **warm water.**

4. At changeover, ensure apparatus is assembled correctly and the syringe barrel is filled with water.

© UCLES 2022

www.dynamicpapers.com

Apparatus and chemicals for Question 2

Each candidate will require the following materials and apparatus. Labels do **not** need to include concentrations.

- three test-tubes (approximately 125 mm × 16 mm) and a means to support them
- spatula

[MH][N]
- 1 g of copper(II) oxide labelled **K**

[MH][N]
- 1 g of copper(II) carbonate labelled **L**

[F]
- 1 × 2 cm strip of magnesium ribbon labelled **M**
- 20 cm^3 of 1.0 mol dm^{-3} hydrochloric acid labelled **dilute hydrochloric acid**
- wooden splint and a means to light it
- access to distilled water or deionised water
- sight of a clock with a second hand
- paper towels

Apparatus and chemicals for Question 3

No apparatus or chemicals are required for this question.

© UCLES 2022

[Turn over

www.dynamicpapers.com

Apparatus and chemicals for Question 4

Each candidate will require the following materials and apparatus.

- metre rule graduated in millimetres (see note 1)
- pivot on which to balance metre rule (a triangular piece of wood or a prism is suitable)
- 30 g mass labelled **30 g mass** (see note 2)
- adhesive tape and means to cut it (see note 3)
- newton meter suitable for use with the metre rule

Notes

1. The metre rule must have a light hook, or a hole near to one end, so that it can be suspended from the newton meter.

2. Candidates need a single, symmetrical mass of 30 g such as 3 × 10 g slotted masses taped together, as shown in the diagram. The label should be attached to the top of the 30 g mass so that the centre of the mass is covered, as shown in the diagram.

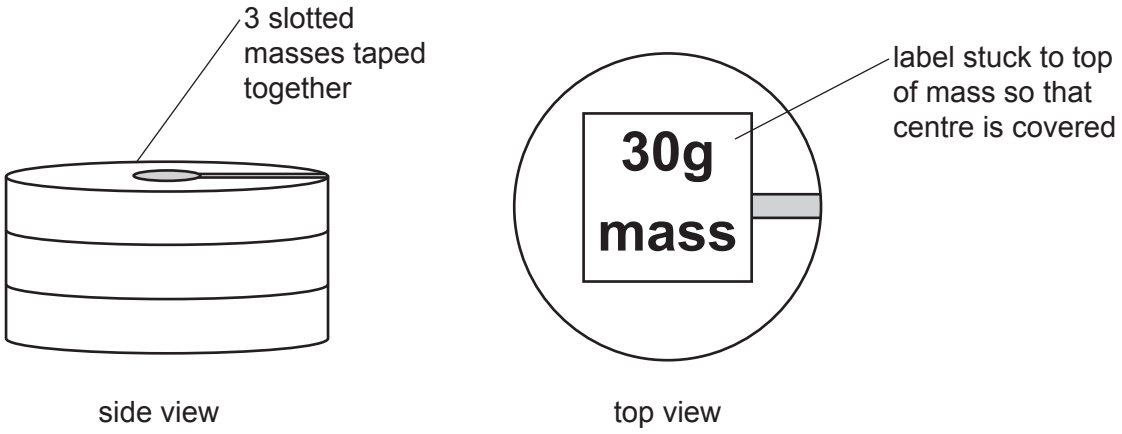

3. Candidates will use the adhesive tape to attach the 30 g mass to the metre rule.

4. At changeover, check that the mass is removed from the metre rule and that the 30 g mass is still intact, including label. Make sure that the metre rule is removed from the newton meter.

Permission to reproduce items where third-party owned material protected by copyright is included has been sought and cleared where possible. Every reasonable effort has been made by the publisher (UCLES) to trace copyright holders, but if any items requiring clearance have unwittingly been included, the publisher will be pleased to make amends at the earliest possible opportunity.

To avoid the issue of disclosure of answer-related information to candidates, all copyright acknowledgements are reproduced online in the Cambridge Assessment International Education Copyright Acknowledgements Booklet. This is produced for each series of examinations and is freely available to download at www.cambridgeinternational.org after the live examination series.

Cambridge Assessment International Education is part of Cambridge Assessment. Cambridge Assessment is the brand name of the University of Cambridge Local Examinations Syndicate (UCLES), which is a department of the University of Cambridge.

© UCLES 2022

www.dynamicpapers.com

Supervisor's report

Syllabus and component number | | | | | / | | |

Centre number | | | | | |

Centre name .....

Time of the practical session .....

Laboratory name/number .....

Give details of any difficulties experienced by the centre or by candidates (include the relevant candidate names and candidate numbers).

You must include:

- any difficulties experienced by the centre in the preparation of materials
- any difficulties experienced by candidates, e.g. due to faulty materials or apparatus
- any specific assistance given to candidates.

© UCLES 2022

[Turn over

www.dynamicpapers.com

Space for supervisor to record results, if relevant, e.g. temperature of the laboratory; results for Question 1.

Declaration

1 Each packet that I am returning to Cambridge International contains all of the following items:
- the scripts of the candidates specified on the bar code label provided
- the supervisor's results relevant to these candidates
- the supervisor's reports relevant to these candidates
- seating plans for each practical session, referring to each candidate by candidate number
- the attendance register.

2 Where the practical exam has taken place in more than one practical session, I have clearly labelled the supervisor's results, supervisor's reports and seating plans with the time and laboratory name/number for each practical session.

3 I have included details of difficulties relating to each practical session experienced by the centre or by candidates.

4 I have reported any other adverse circumstances affecting candidates, e.g. illness, bereavement or temporary injury, directly to Cambridge International on a *special consideration form*.

Signed ..... (supervisor)

Name (in block capitals) .....

© UCLES 2022