Cambridge Assessment International Education

Cambridge IGCSE™

COMBINED SCIENCE **0653/22**

Paper 2 Multiple Choice (Extended) **May/June 2023**

45 minutes

You must answer on the multiple choice answer sheet.

You will need: Multiple choice answer sheet
Soft clean eraser
Soft pencil (type B or HB is recommended)

INSTRUCTIONS

- There are **forty** questions on this paper. Answer **all** questions.
- For each question there are four possible answers **A**, **B**, **C** and **D**. Choose the **one** you consider correct and record your choice in soft pencil on the multiple choice answer sheet.
- Follow the instructions on the multiple choice answer sheet.
- Write in soft pencil.
- Write your name, centre number and candidate number on the multiple choice answer sheet in the spaces provided unless this has been done for you.
- Do **not** use correction fluid.
- Do **not** write on any bar codes.
- You may use a calculator.

INFORMATION

- The total mark for this paper is 40.
- Each correct answer will score one mark.
- Any rough working should be done on this question paper.
- The Periodic Table is printed in the question paper.

This document has **16** pages. Any blank pages are indicated.

IB23 06_0653_22/3RP

1 Which process removes toxic materials from an organism?

A digestion

B egestion

C excretion

D respiration

2 The diagram shows a cell as seen with a microscope.

Which label is correct?

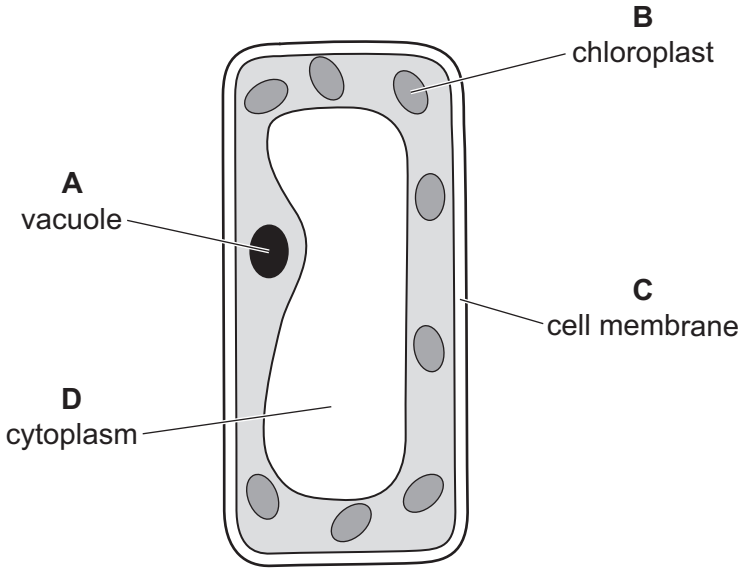

3 The activity of an enzyme-catalysed reaction is altered by changes in temperature.

What occurs when the temperature rises above the temperature at which the enzyme works best?

A The shape of the substrate molecule no longer fits the active site of the enzyme molecule.

B The increasing temperature causes the substrate molecules to break down.

C The concentration of the substrate increases and that of the product decreases.

D The kinetic energy of the substrate particles decreases.

4 In plants, photosynthesis takes place in the leaf.

During photosynthesis, ...P..... transfers .....Q..... energy into .....R..... energy. This is used for the synthesis of .....S..... .

Which row correctly completes gaps P, Q, R and S?

	P	Q	R	S
A	chlorophyll	chemical	light	carbohydrate
B	chlorophyll	light	chemical	carbohydrate
C	glucose	chemical	light	chlorophyll
D	glucose	light	chemical	chlorophyll

5 What can be caused by a diet containing too little vitamin C?

A anaemia

B coronary heart disease

C rickets

D scurvy

6 In which order does food pass through parts of the alimentary canal?

A oesophagus → anus → large intestine

B small intestine → oesophagus → stomach

C small intestine → large intestine → anus

D stomach → large intestine → small intestine

7 The table shows two processes that are involved in transpiration.

What happens to the rate of these processes in high humidity?

	diffusion of water vapour through stomata	evaporation of water from surfaces of mesophyll cells
A	rate decreases	rate increases
B	rate decreases	rate decreases
C	rate increases	rate increases
D	rate increases	rate decreases

8 A sample of blood is taken from a person who often gets infections.

The blood is also slow to clot.

Which blood components are likely to be at a lower level than normal?

1 platelets

2 red blood cells

3 white blood cells

A 1, 2 and 3 **B** 1 and 2 only **C** 1 and 3 only **D** 2 and 3 only

9 In respiration, glucose is broken down to release energy.

Which row states how humans could use this energy?

	growth	keep a constant body temperature	muscle contraction	protein synthesis
A	✓	✓	✓	✓
B	✓	✓	✗	✓
C	✗	✗	✓	✓
D	✗	✓	✓	✗

key
✓ = true
✗ = false

10 What happens when adrenaline is released into the blood?

	blood glucose concentration	pulse rate
A	increases	increases
B	increases	decreases
C	decreases	increases
D	decreases	decreases

11 Which row describes asexual reproduction?

	number of parents involved	offspring genetically identical to each other
A	1	yes
B	1	no
C	2	yes
D	2	no

12 The diagram shows part of a food web.

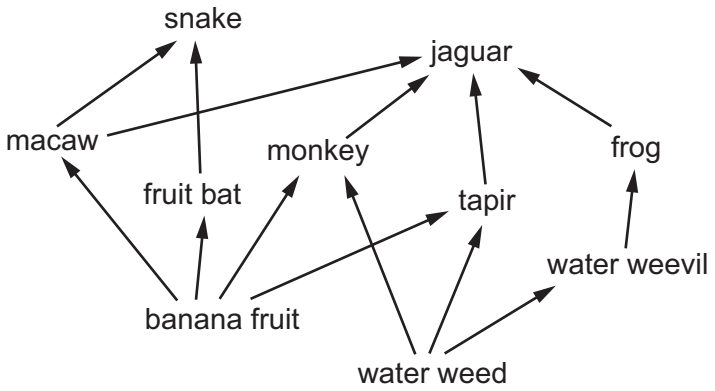

Which row gives the number of each type of consumer?

	primary	secondary	tertiary
A	2	2	0
B	2	5	3
C	5	1	0
D	5	3	1

13 Eutrophication of fresh water occurs because of a series of events in the water.

The list describes these events.

1 increased aerobic respiration by decomposers

2 increased availability of nitrate and other ions

3 increased decomposition after death of producers

4 increased growth of producers

5 reduction in amount of dissolved oxygen in the water

Which order of these events results in the death of fish and other aquatic organisms?

A $2 \rightarrow 1 \rightarrow 4 \rightarrow 5 \rightarrow 3$

B $2 \rightarrow 4 \rightarrow 3 \rightarrow 1 \rightarrow 5$

C $4 \rightarrow 2 \rightarrow 3 \rightarrow 1 \rightarrow 5$

D $4 \rightarrow 5 \rightarrow 2 \rightarrow 1 \rightarrow 3$

14 The formulae of three substances are shown.

substance	formula
methane	CH_4
water	H_2O
oxygen	O_2

Which statement is correct?

A Methane is made from five different types of atom.

B Methane, water and oxygen are molecules.

C Only methane and water are molecules.

D Oxygen is made from two different types of atom.

15 What is the definition of nucleon number?

A the number of protons in an atom

B the number of electrons in an atom

C the total number of electrons and neutrons in an atom

D the total number of neutrons and protons in an atom

16 Which structure represents an ionic compound?

A

B

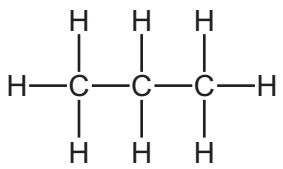

C

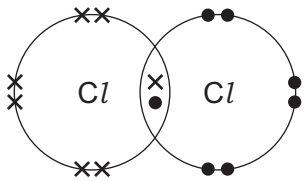

D

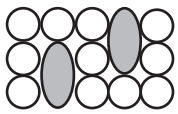

17 Aqueous lead(II) nitrate, $Pb(NO_3)_2$, reacts with aqueous potassium iodide to make a precipitate of lead(II) iodide.

What is the ionic equation for this reaction?

A $Pb^+ + I^- \rightarrow PbI$

B $Pb^{2+} + 2I^- \rightarrow PbI_2$

C $Pb(NO_3)_2 + I^- \rightarrow PbI + 2NO_3^-$

D $Pb^{2+} + 2NO_3^- + 2I^- \rightarrow PbI_2 + 2NO_3^-$

18 Which statement about the electrolysis of ionic substances is correct?

A Negatively charged ions move to the cathode.

B At the anode, ions lose electrons.

C The anions gain electrons during electrolysis.

D The cations are negatively charged.

19 The energy level diagram for dissolving solid ammonium nitrate in water is shown.

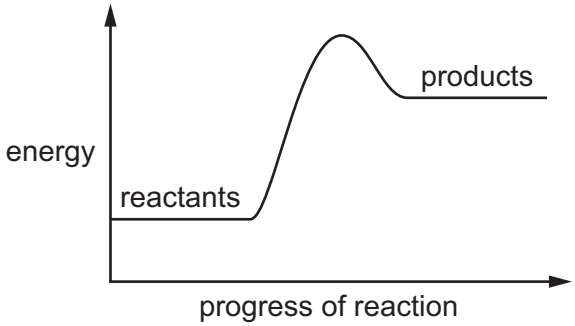

Which statement about this process is correct?

A Activation energy is given out causing an overall increase in temperature.

B Energy is taken in to form new bonds at the start of the reaction.

C During the reaction, the temperature of the water decreases because the reaction takes in energy.

D The products have a higher energy than the reactants because the reaction is exothermic.

20 Reducing agents are .....1..... in a reaction.

Reducing agents cause the other substance in the reaction to .....2..... oxygen.

Which words complete gaps 1 and 2?

	1	2
A	oxidised	gain
B	oxidised	lose
C	reduced	gain
D	reduced	lose

21 Dilute sulfuric acid reacts with aqueous potassium hydroxide.

What are the products of this reaction?

	potassium hydroxide	potassium sulfate	carbon dioxide	water
A	✓	✗	✓	✓
B	✗	✓	✗	✓
C	✗	✓	✓	✓
D	✗	✓	✗	✗

key
✓ = yes
✗ = no

22 The results of two tests on solid P are shown.

	test	result
1	add aqueous sodium hydroxide to solid	gas given off that turns moist red litmus paper blue
2	dissolve solid in water, add dilute aqueous silver nitrate	white precipitate formed

What is P?

A aluminium carbonate

B aluminium sulfate

C ammonium chloride

D ammonium nitrate

23 Which electronic structure is that of a metal?

A 2,8,3 **B** 2,8,4 **C** 2,8,6 **D** 2,8,7

24 Why are gold alloys, rather than pure gold, used to make jewellery?

A Alloys are better electrical conductors.

B Alloys are less likely to corrode.

C Alloys are harder.

D Alloys are less dense.

25 What is an effect of increasing the amount of carbon dioxide in the atmosphere?

A increased acid rain

B increased climate change

C increased damage to buildings

D increased health problems

26 Which statements about the members of an homologous series are correct?

1 They have similar chemical properties.

2 They have the same boiling points.

3 They have the same general formula.

A 1, 2 and 3 **B** 1 and 2 only **C** 1 and 3 only **D** 2 and 3 only

27 Which equation represents cracking?

A $C_6H_{14} \rightarrow 2C_3H_6 + H_2$

B $C_3H_8 + 5O_2 \rightarrow 3CO_2 + 4H_2O$

C $nCH_2{=}CH_2 \rightarrow$ poly(ethene)

D $CH_2{=}CH_2 + Br_2 \rightarrow CH_2BrCH_2Br$

28 Which speed–time graph represents the motion of an object that travels a distance of 24 m?

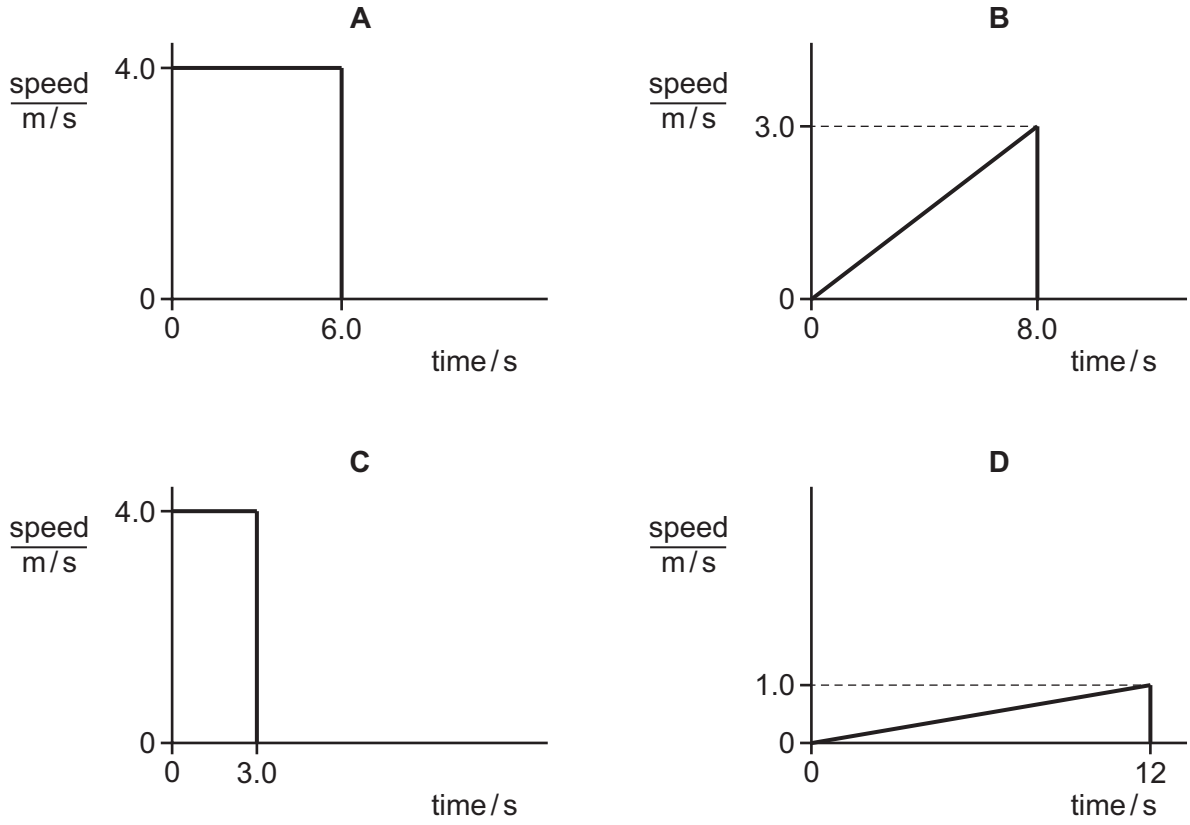

29 A vehicle is taken from the Earth to the Moon where the gravitational field strength is smaller.

How do the mass and the weight of the vehicle on the Moon compare with their values on the Earth?

A smaller mass and smaller weight

B smaller mass and the same weight

C the same mass and smaller weight

D the same mass and the same weight

30 Which form of energy is **not** a form of potential energy?

A chemical

B elastic

C gravitational

D sound

31 A rock of mass 2000 kg has a kinetic energy of 64 000 J.

What is the speed of the rock?

A 5.7 m/s **B** 8.0 m/s **C** 32 m/s **D** 64 m/s

32 A circuit contains two lamps and four ammeters. The readings on the ammeters are I_1, I_2, I_3 and I_4, as shown.

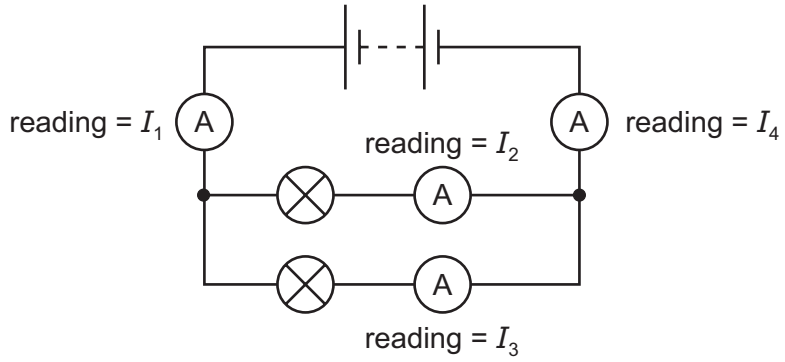

Which equation is correct?

A $I_1 = I_4 = (I_2 + I_3)$

B $(I_1 + I_4) = (I_2 + I_3)$

C $I_1 = I_2 = I_3 = I_4$

D $I_2 = I_3 = (I_1 + I_4)$

33 What happens as a liquid starts to evaporate?

A The mass of the remaining liquid increases.

B The mass of the remaining liquid is constant.

C The temperature of the remaining liquid decreases.

D The temperature of the remaining liquid increases.

34 The temperature of air next to a heater increases. This causes a convection current.

Which row describes what happens to the density of the air next to the heater and states the direction of movement of this air?

	density of air	direction of movement of air
A	decreases	downwards
B	decreases	upwards
C	increases	downwards
D	increases	upwards

35 The diagram represents a sound wave travelling in air.

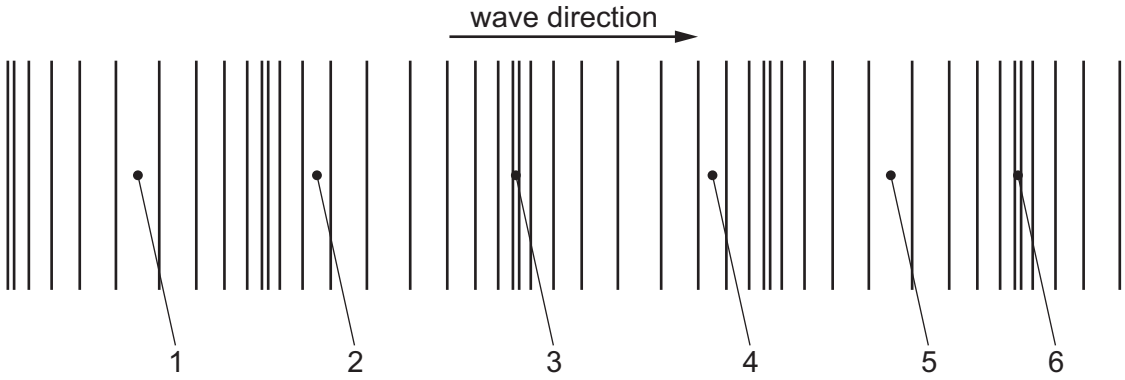

Which numbered points are at the centre of a compression and which numbered points are at the centre of a rarefaction?

	centre of a compression	centre of a rarefaction
A	1 and 5	2 and 4
B	1 and 5	3 and 6
C	3 and 6	1 and 5
D	3 and 6	2 and 4

36 The diagram shows the change in direction of light as it moves from medium 1 into medium 2.

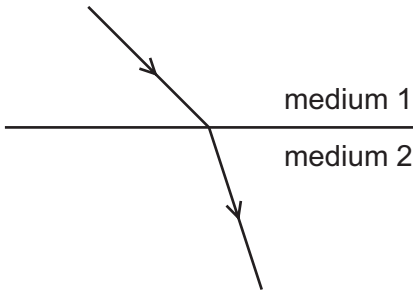

Why does this change of direction happen?

A Light is a longitudinal wave in medium 1 but a transverse wave in medium 2.

B Light is a transverse wave in medium 1 but a longitudinal wave in medium 2.

C The frequency of the light changes as it moves from medium 1 into medium 2.

D The speed of the light changes as it moves from medium 1 into medium 2.

37 A student uses a thin converging lens as a magnifying glass to view an object.

Where is the object placed?

A as far away as possible from the lens

B at a distance from the lens that is slightly greater than the focal length of the lens

C at a distance from the lens that is less than the focal length of the lens

D between the lens and the student's eye

38 A battery is connected to two identical lamps X and Y in parallel.

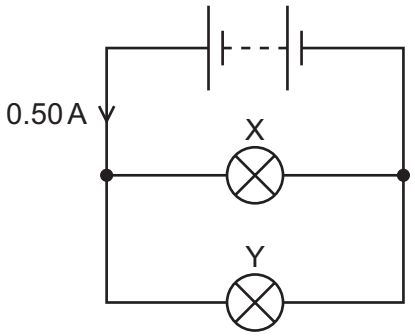

The current in the battery is 0.50 A.

How much charge flows through lamp Y in 10 s?

A 0.025 C **B** 0.050 C **C** 2.5 C **D** 5.0 C

39 The diagram shows a cell connected to a resistor and two meters, X and Y.

The circuit is used when determining the resistance of the resistor.

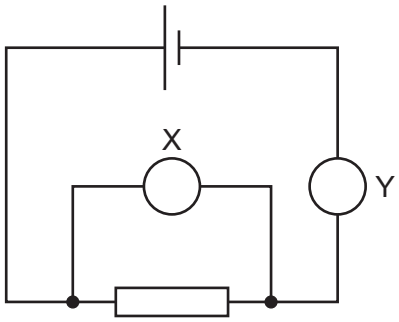

What are the quantities measured by meters X and Y, and what are their correct units?

	meter X		meter Y	
	quantity	unit	quantity	unit
A	current	A	p.d.	V
B	current	V	p.d.	A
C	p.d.	A	current	V
D	p.d.	V	current	A

40 An electrical appliance with a resistance of 600 Ω is connected to a 240 V supply.

Which fuse rating is appropriate to protect the appliance and the wires from overheating if a fault occurs?

A 0.04 A **B** 0.5 A **C** 5 A **D** 13 A

BLANK PAGE

The Periodic Table of Elements

Key

atomic number
atomic symbol
name
relative atomic mass

Group

I	II											III	IV	V	VI	VII	VIII
							1 H hydrogen 1										2 He helium 4
3 Li lithium 7	4 Be beryllium 9											5 B boron 11	6 C carbon 12	7 N nitrogen 14	8 O oxygen 16	9 F fluorine 19	10 Ne neon 20
11 Na sodium 23	12 Mg magnesium 24											13 Al aluminium 27	14 Si silicon 28	15 P phosphorus 31	16 S sulfur 32	17 Cl chlorine 35.5	18 Ar argon 40
19 K potassium 39	20 Ca calcium 40	21 Sc scandium 45	22 Ti titanium 48	23 V vanadium 51	24 Cr chromium 52	25 Mn manganese 55	26 Fe iron 56	27 Co cobalt 59	28 Ni nickel 59	29 Cu copper 64	30 Zn zinc 65	31 Ga gallium 70	32 Ge germanium 73	33 As arsenic 75	34 Se selenium 79	35 Br bromine 80	36 Kr krypton 84
37 Rb rubidium 85	38 Sr strontium 88	39 Y yttrium 89	40 Zr zirconium 91	41 Nb niobium 93	42 Mo molybdenum 96	43 Tc technetium –	44 Ru ruthenium 101	45 Rh rhodium 103	46 Pd palladium 106	47 Ag silver 108	48 Cd cadmium 112	49 In indium 115	50 Sn tin 119	51 Sb antimony 122	52 Te tellurium 128	53 I iodine 127	54 Xe xenon 131
55 Cs caesium 133	56 Ba barium 137	57–71 lanthanoids	72 Hf hafnium 178	73 Ta tantalum 181	74 W tungsten 184	75 Re rhenium 186	76 Os osmium 190	77 Ir iridium 192	78 Pt platinum 195	79 Au gold 197	80 Hg mercury 201	81 Tl thallium 204	82 Pb lead 207	83 Bi bismuth 209	84 Po polonium –	85 At astatine –	86 Rn radon –
87 Fr francium –	88 Ra radium –	89–103 actinoids	104 Rf rutherfordium –	105 Db dubnium –	106 Sg seaborgium –	107 Bh bohrium –	108 Hs hassium –	109 Mt meitnerium –	110 Ds darmstadtium –	111 Rg roentgenium –	112 Cn copernicium –	113 Nh nihonium –	114 Fl flerovium –	115 Mc moscovium –	116 Lv livermorium –	117 Ts tennessine –	118 Og oganesson –

lanthanoids	57 La lanthanum 139	58 Ce cerium 140	59 Pr praseodymium 141	60 Nd neodymium 144	61 Pm promethium –	62 Sm samarium 150	63 Eu europium 152	64 Gd gadolinium 157	65 Tb terbium 159	66 Dy dysprosium 163	67 Ho holmium 165	68 Er erbium 167	69 Tm thulium 169	70 Yb ytterbium 173	71 Lu lutetium 175
actinoids	89 Ac actinium –	90 Th thorium 232	91 Pa protactinium 231	92 U uranium 238	93 Np neptunium –	94 Pu plutonium –	95 Am americium –	96 Cm curium –	97 Bk berkelium –	98 Cf californium –	99 Es einsteinium –	100 Fm fermium –	101 Md mendelevium –	102 No nobelium –	103 Lr lawrencium –

The volume of one mole of any gas is 24 dm^3 at room temperature and pressure (r.t.p.).