www.dynamicpapers.com

Cambridge Assessment International Education

Cambridge IGCSE™

COMBINED SCIENCE **0653/51**

Paper 5 Practical Test **May/June 2023**

CONFIDENTIAL INSTRUCTIONS

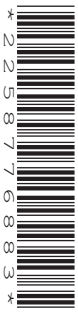

This document gives details of how to prepare for and administer the practical exam.

The information in this document and the identity of any materials supplied by Cambridge International are confidential and must NOT reach candidates either directly or indirectly.

The supervisor must complete the report at the end of this document and return it with the scripts.

INSTRUCTIONS

- If you have any queries regarding these confidential instructions, contact Cambridge International stating the centre number, the syllabus and component number and the nature of the query.
  email info@cambridgeinternational.org
  phone +44 1223 553554

This document has **12** pages. Any blank pages are indicated.

DC (CJ/SG) 316013/2
© UCLES 2023

www.dynamicpapers.com

General information about practical exams

Centres must follow the guidance on science practical exams given in the *Cambridge Handbook*.

Safety

Supervisors must follow national and local regulations relating to safety and first aid.

Only those procedures described in the question paper should be attempted.

Supervisors must inform candidates that materials and apparatus used in the exam should be treated with caution. Suitable eye protection should be used where necessary.

The following hazard codes are used in these confidential instructions, where relevant:

C	corrosive	**MH**	moderate hazard
HH	health hazard	**T**	acutely toxic
F	flammable	**O**	oxidising
N	hazardous to the aquatic environment		

Hazard data sheets relating to substances used in this exam should be available from your chemical supplier.

Before the exam

- The packets containing the question papers must **not** be opened before the exam.
- It is assumed that standard school laboratory facilities, as indicated in the *Guide to Planning Practical Science*, will be available.
- Spare materials and apparatus for the tasks set must be available for candidates, if required.

During the exam

- It must be made clear to candidates at the start of the exam that they may request spare materials and apparatus for the tasks set.
- Where specified, the supervisor **must** perform the experiments and record the results as instructed. This must be done **out of sight** of the candidates, using the same materials and apparatus as the candidates.
- Any assistance provided to candidates must be recorded in the supervisor's report.
- If any materials or apparatus need to be replaced, for example, in the event of breakage or loss, this must be recorded in the supervisor's report.

After the exam

- The supervisor must complete a report for each practical session held and each laboratory used.
- Each packet of scripts returned to Cambridge International must contain the following items:
  - the scripts of the candidates specified on the bar code label provided
  - the supervisor's results relevant to these candidates
  - the supervisor's reports relevant to these candidates
  - seating plans for each practical session, referring to each candidate by candidate number
  - the attendance register.

© UCLES 2023

www.dynamicpapers.com

Specific information for this practical exam

During the exam, the supervisor (**not** the invigilator) must do the experiments in Questions 1, 2 and 4 and record the results on a spare copy of the question paper, clearly labelled 'supervisor's results'.

Apparatus and chemicals for Question 1

Each candidate will require the following materials and apparatus.

- 20 cm^3 of 1.00% vitamin C solution in a beaker labelled **1.00% vitamin C** (see note 1)
- 20 cm^3 of 0.75% vitamin C solution in a beaker labelled **0.75% vitamin C** (see note 2)
- 20 cm^3 of 0.50% vitamin C solution in a beaker labelled **0.50% vitamin C** (see note 3)
- 20 cm^3 of 0.25% vitamin C solution in a beaker labelled **0.25% vitamin C** (see note 4)
- 20 cm^3 of 0.4% vitamin C solution in a beaker labelled **fruit juice** (see note 5)
- 10 cm^3 of 1% starch solution (see note 6)
- 60 cm^3 of iodine solution (see note 7)
- 5 × boiling tubes (large test-tubes), approximately 150 mm × 25 mm, and a means to support them
- 20 cm^3 syringe
- 1 cm^3 syringe
- 10 cm^3 measuring cylinder
- 5 × paper towels
- means of labelling glassware, e.g. marker pen
- stirring rod

© UCLES 2023

[Turn over

www.dynamicpapers.com

Notes

1. *1.00% vitamin C solution*
   To prepare the 1.00% vitamin C solution, dissolve 1.00 g vitamin C (ascorbic acid) in 80 cm^3 distilled water and make up to 100 cm^3 with more distilled water.

2. *0.75% vitamin C solution*
   To prepare the 0.75% vitamin C solution, dissolve 0.75 g vitamin C (ascorbic acid) in 80 cm^3 distilled water and make up to 100 cm^3 with more distilled water.

3. *0.50% vitamin C solution*
   To prepare the 0.50% vitamin C solution, dissolve 0.50 g vitamin C (ascorbic acid) in 80 cm^3 distilled water and make up to 100 cm^3 with more distilled water.

4. *0.25% vitamin C solution*
   To prepare the 0.25% vitamin C solution, dissolve 0.25 g vitamin C (ascorbic acid) in 80 cm^3 distilled water and make up to 100 cm^3 with more distilled water.

5. *Fruit juice (0.40% vitamin C solution)*
   To prepare the 0.40% vitamin C solution, dissolve 0.40 g vitamin C (ascorbic acid) in 80 cm^3 distilled water and make up to 100 cm^3 with more distilled water.

6. *1% starch solution*
   To prepare 1% starch solution, dissolve 1.00 g soluble starch in 80 cm^3 of distilled water. The starch will need gentle heating for it to fully dissolve. Make up to 100 cm^3 with more distilled water.

7. *iodine solution*
   Standard 0.05 mol dm^{-3} iodine solution suitable for food testing is suitable.

© UCLES 2023

www.dynamicpapers.com

During the exam, the supervisor (**not** the invigilator) must do the experiments in Questions 1, 2 and 4 and record the results on a spare copy of the question paper, clearly labelled 'supervisor's results'.

Apparatus and chemicals for Question 2

Each candidate will require the following materials and apparatus. Labels do **not** need to include concentrations.

low hazard
- 5 g of a mixture of sand and potassium sulfate labelled **fertiliser** (see note 1)

[C]
- 10 cm^3 of 1.0 mol / dm^3 nitric acid labelled **dilute nitric acid**

low hazard
- 10 cm^3 of 0.1 mol / dm^3 barium nitrate labelled **barium nitrate**
- 25 cm^3 measuring cylinder
- 100 or 250 cm^3 glass beaker
- test-tube, approximately 125 mm × 16 mm, and a means to support it
- boiling tube (large test-tube), approximately 150 mm × 25 mm, and a means to support it
- filter funnel
- 2 × filter papers to fit filter funnel
- glass stirring rod
- spatula
- Bunsen burner and a means to light the Bunsen burner
- cement laboratory mat
- 2 × wooden splints
- access to distilled water

Notes

1. The mixture should contain at least 2.5 g of potassium sulfate and be thoroughly mixed.

Apparatus and chemicals for Question 3

No apparatus or chemicals are required for this question.

© UCLES 2023

[Turn over

www.dynamicpapers.com

During the exam, the supervisor (**not** the invigilator) must do the experiments in Questions 1, 2 and 4 and record the results on a spare copy of the question paper, clearly labelled 'supervisor's results'.

Apparatus for Question 4

Each candidate will require the following materials and apparatus.

Items to be supplied by the centre (per set of apparatus unless otherwise specified)

- power supply of approximately 1.5 V – 3 V. Where candidates are provided with a power supply with a variable output voltage, the voltage setting should be set by the supervisor and fixed (e.g. taped) (see note 2)
- two identical lamps, labelled **L** and **M**, in suitable holders. Any low-voltage lamp will suffice (for example flashlamp bulbs rated 3.5 V – 0.3 A), provided that it glows brightly when connected as shown in Fig. 4.1 (see note 3)
- switch. The switch may be an integral part of the power supply
- ammeter capable of reading up to 1.00 A with a minimum precision of 0.05 A (see note 4)
- voltmeter capable of measuring the supply p.d. with a minimum precision of 0.1 V (see note 4)
- sufficient connecting leads to construct the circuit shown in Fig. 4.1, with two additional leads
- spare lamps should be available

Notes

1. The components are to be connected by the supervisor as shown in Fig. 4.1.

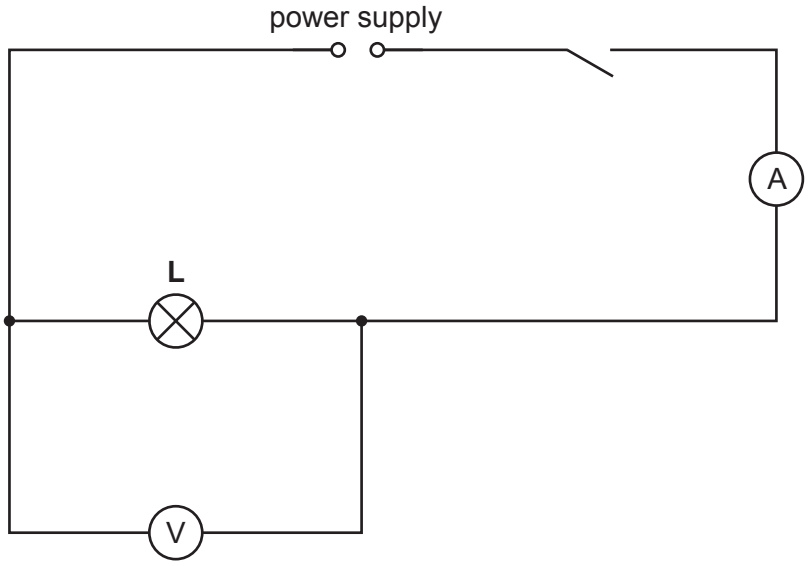

Fig. 4.1

© UCLES 2023

www.dynamicpapers.com

2. If cells are to be used, they must remain adequately charged throughout the examination. Spare cells should be available.

3. The lamp holders must have suitable terminals so that candidates are able to rearrange the circuit easily and quickly.

4. Either analogue or digital meters are suitable. Any variable settings should be set by the supervisor and fixed (e.g. taped). Spare meters should be available.

Action at changeover

Set up the circuit so that it is arranged as shown in Fig. 4.1.
Check the power supply.

www.dynamicpapers.com

BLANK PAGE

www.dynamicpapers.com

BLANK PAGE

www.dynamicpapers.com

BLANK PAGE

Permission to reproduce items where third-party owned material protected by copyright is included has been sought and cleared where possible. Every reasonable effort has been made by the publisher (UCLES) to trace copyright holders, but if any items requiring clearance have unwittingly been included, the publisher will be pleased to make amends at the earliest possible opportunity.

To avoid the issue of disclosure of answer-related information to candidates, all copyright acknowledgements are reproduced online in the Cambridge Assessment International Education Copyright Acknowledgements Booklet. This is produced for each series of examinations and is freely available to download at www.cambridgeinternational.org after the live examination series.

Cambridge Assessment International Education is part of Cambridge Assessment. Cambridge Assessment is the brand name of the University of Cambridge Local Examinations Syndicate (UCLES), which is a department of the University of Cambridge.

© UCLES 2023

www.dynamicpapers.com

Supervisor's report

Syllabus and component number | | | | | / | | |

Centre number | | | | | |

Centre name .....

Time of the practical session .....

Laboratory name/number .....

Give details of any difficulties experienced by the centre or by candidates (include the relevant candidate names and candidate numbers).

You must include:

- any difficulties experienced by the centre in the preparation of materials
- any difficulties experienced by candidates, e.g. due to faulty materials or apparatus
- any specific assistance given to candidates.

© UCLES 2023

[Turn over

www.dynamicpapers.com

Space for supervisor to record results, if relevant, e.g. temperature of the laboratory; results for Question 1.

Declaration

1 Each packet that I am returning to Cambridge International contains all of the following items:
- the scripts of the candidates specified on the bar code label provided
- the supervisor's results relevant to these candidates
- the supervisor's reports relevant to these candidates
- seating plans for each practical session, referring to each candidate by candidate number
- the attendance register.

2 Where the practical exam has taken place in more than one practical session, I have clearly labelled the supervisor's results, supervisor's reports and seating plans with the time and laboratory name/number for each practical session.

3 I have included details of difficulties relating to each practical session experienced by the centre or by candidates.

4 I have reported any other adverse circumstances affecting candidates, e.g. illness, bereavement or temporary injury, directly to Cambridge International on a *special consideration form*.

Signed ..... (supervisor)

Name (in block capitals) .....

© UCLES 2023