www.dynamicpapers.com

Cambridge Assessment International Education

Cambridge IGCSE™

COMBINED SCIENCE **0653/52**

Paper 5 Practical Test **February/March 2023**

CONFIDENTIAL INSTRUCTIONS

3143923241

This document gives details of how to prepare for and administer the practical exam.

The information in this document and the identity of any materials supplied by Cambridge International are confidential and must NOT reach candidates either directly or indirectly.

The supervisor must complete the report at the end of this document and return it with the scripts.

INSTRUCTIONS

- If you have any queries regarding these confidential instructions, contact Cambridge International stating the centre number, the syllabus and component number and the nature of the query.
  email info@cambridgeinternational.org
  phone +44 1223 553554

DC (CJ/SW) 314424/2
© UCLES 2023

[Turn over

www.dynamicpapers.com

General information about practical exams

Centres must follow the guidance on science practical exams given in the *Cambridge Handbook*.

Safety

Supervisors must follow national and local regulations relating to safety and first aid.

Only those procedures described in the question paper should be attempted.

Supervisors must inform candidates that materials and apparatus used in the exam should be treated with caution. Suitable eye protection should be used where necessary.

The following hazard codes are used in these confidential instructions, where relevant:

C	corrosive	**MH**	moderate hazard
HH	health hazard	**T**	acutely toxic
F	flammable	**O**	oxidising
N	hazardous to the aquatic environment		

Hazard data sheets relating to substances used in this exam should be available from your chemical supplier.

Before the exam

- The packets containing the question papers must **not** be opened before the exam.
- It is assumed that standard school laboratory facilities, as indicated in the *Guide to Planning Practical Science*, will be available.
- Spare materials and apparatus for the tasks set must be available for candidates, if required.

During the exam

- It must be made clear to candidates at the start of the exam that they may request spare materials and apparatus for the tasks set.
- Where specified, the supervisor **must** perform the experiments and record the results as instructed. This must be done **out of sight** of the candidates, using the same materials and apparatus as the candidates.
- Any assistance provided to candidates must be recorded in the supervisor's report.
- If any materials or apparatus need to be replaced, for example, in the event of breakage or loss, this must be recorded in the supervisor's report.

After the exam

- The supervisor must complete a report for each practical session held and each laboratory used.
- Each packet of scripts returned to Cambridge International must contain the following items:
  - the scripts of the candidates specified on the bar code label provided
  - the supervisor's results relevant to these candidates
  - the supervisor's reports relevant to these candidates
  - seating plans for each practical session, referring to each candidate by candidate number
  - the attendance register.

© UCLES 2023

www.dynamicpapers.com

Specific information for this practical exam

During the exam, the supervisor (**not** the invigilator) must do the experiments in Questions 1, 2 and 3 and record the results on a spare copy of the question paper, clearly labelled 'supervisor's results'.

Apparatus and chemicals to be supplied by the centre (per set of apparatus unless otherwise specified)

For Question 1

Each candidate will require the following materials and apparatus. Labels do **not** need to include concentrations.

- 30 cm^3 of 0.4 mol/dm^3 hydrochloric acid, labelled **HC*l***
- 50 cm^3 milk, labelled **milk** (see note 1)
- 30 cm^3 distilled water, labelled **distilled water**
- 5 × test-tubes (Pyrex or hard glass), approximately 125 mm × 16 mm and a means to support them
- 5 × small beakers
- 2 × 10 cm^3 syringes
- 1 cm^3 syringe
- 250 cm^3 beaker labelled **water-bath**
- supply of hot and cold water (see note 2)
- thermometer, –10 °C to +110 °C with 1 °C graduations
- 5 × paper towels
- glass rod
- 10 cm^3 measuring cylinder
- means of labelling glassware, e.g. marker pen
- a 30 cm ruler graduated in mm

Notes

1. Milk should be full-fat homogenised or semi-skimmed cow's milk, provided at room temperature.
2. A supply of hot and cold tap water is sufficient.

© UCLES 2023

www.dynamicpapers.com

For Question 2

Each candidate will require the following materials and apparatus. Labels do **not** need to include concentrations.

[MH]

- 5 cm^3 of 0.5 mol / dm^3 iron(II) sulfate solution in a stoppered test-tube labelled **solution G** (see note 1)

[C]

- 40 cm^3 of 1.0 mol / dm^3 sodium hydroxide labelled **aqueous sodium hydroxide**
- 50 cm^3 of 1.0 mol / dm^3 hydrochloric acid labelled **dilute hydrochloric acid**
- small test-tube (Pyrex or hard glass), approximately 125 mm × 16 mm and a means to support it
- thermometer, –10 °C to +110 °C with 1 °C graduations that can be used for stirring a solution
- 25 cm^3 measuring cylinder
- 10 cm^3 measuring cylinder
- 250 cm^3 glass beaker
- dropping pipette
- supply of paper towels

Note

1. The aqueous iron(II) sulfate should be freshly made up using 0.5 mol / dm^3 sulfuric acid.

© UCLES 2023

www.dynamicpapers.com

For Question 3

Each candidate will require the following materials and apparatus.

- clamp, boss and stand
- expendable spring. Spare springs should be available (see note 2)
- metre rule graduated in mm (see note 3)
- a 10 g mass hanger and seven 10 g slotted masses (see note 4)
- set-square

Notes

1. The apparatus is to be set up for the candidates as shown in Fig. 3.1. The spring is to be suspended from the clamp, supported by a boss and stand. The spring must be sufficiently high above the laboratory bench so that when the 0.80 N load is suspended from the spring, the bottom of the load is above the surface of the bench.

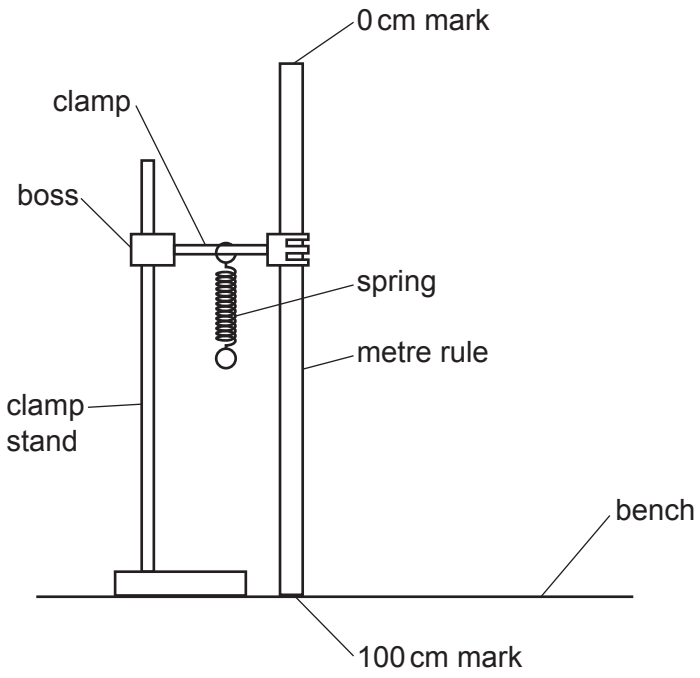

Fig. 3.1

2. Expendable spring, approximately 55 mm overall length (including loops) × 15 mm diameter, capable of supporting at least 500 g without overstretching (e.g. Philip Harris expendable steel spring B8G87194, www.philipharris.co.uk).

© UCLES 2023

www.dynamicpapers.com

3. The metre rule (supported by the clamp, boss and stand) must be near to, but not touching, the spring. The 100 cm end of the metre rule must be touching the bench.

4. The seven 10 g slotted masses and the 10 g mass hanger should each be labelled 0.10 N. An alternative to individually labelling the masses is to provide a card with the words 'each mass and the mass hanger has a weight of 0.10 N'. If slotted masses are not available, a light hook must be provided so that up to eight 10 g masses each labelled 0.10 N can be suspended from the spring.

Action at changeover

Check that the apparatus is set up ready for the next candidate, as shown in Fig. 3.1, with the spring near to the metre rule.

Replace the spring if it has been overstretched.

For Question 4

No apparatus or chemicals are required for this question.

Permission to reproduce items where third-party owned material protected by copyright is included has been sought and cleared where possible. Every reasonable effort has been made by the publisher (UCLES) to trace copyright holders, but if any items requiring clearance have unwittingly been included, the publisher will be pleased to make amends at the earliest possible opportunity.

To avoid the issue of disclosure of answer-related information to candidates, all copyright acknowledgements are reproduced online in the Cambridge Assessment International Education Copyright Acknowledgements Booklet. This is produced for each series of examinations and is freely available to download at www.cambridgeinternational.org after the live examination series.

Cambridge Assessment International Education is part of Cambridge Assessment. Cambridge Assessment is the brand name of the University of Cambridge Local Examinations Syndicate (UCLES), which is a department of the University of Cambridge.

© UCLES 2023

www.dynamicpapers.com

Supervisor's report

Syllabus and component number | | | | | / | | |

Centre number | | | | | |

Centre name .....

Time of the practical session .....

Laboratory name/number .....

Give details of any difficulties experienced by the centre or by candidates (include the relevant candidate names and candidate numbers).

You must include:

- any difficulties experienced by the centre in the preparation of materials
- any difficulties experienced by candidates, e.g. due to faulty materials or apparatus
- any specific assistance given to candidates.

© UCLES 2023

www.dynamicpapers.com

Space for supervisor to record results, if relevant, e.g. temperature of the laboratory; results for Question 1.

Declaration

1 Each packet that I am returning to Cambridge International contains all of the following items:
- the scripts of the candidates specified on the bar code label provided
- the supervisor's results relevant to these candidates
- the supervisor's reports relevant to these candidates
- seating plans for each practical session, referring to each candidate by candidate number
- the attendance register.

2 Where the practical exam has taken place in more than one practical session, I have clearly labelled the supervisor's results, supervisor's reports and seating plans with the time and laboratory name/number for each practical session.

3 I have included details of difficulties relating to each practical session experienced by the centre or by candidates.

4 I have reported any other adverse circumstances affecting candidates, e.g. illness, bereavement or temporary injury, directly to Cambridge International on a *special consideration form*.

Signed ..... (supervisor)

Name (in block capitals) .....

© UCLES 2023