* 0000800000001 * DFD
www.dynamicpapers.com

Cambridge Assessment International Education

Cambridge IGCSE™

CANDIDATE NAME

CENTRE NUMBER | | | | | |

CANDIDATE NUMBER | | | | |

0139691117

PHYSICS **0625/52**

Paper 5 Practical Test **October/November 2025**

1 hour 15 minutes

You must answer on the question paper.

You will need: The materials and apparatus listed in the confidential instructions

INSTRUCTIONS

- Answer **all** questions.
- Use a black or dark blue pen. You may use an HB pencil for any diagrams or graphs.
- Write your name, centre number and candidate number in the boxes at the top of the page.
- Write your answer to each question in the space provided.
- Do **not** use an erasable pen or correction fluid.
- Do **not** write on any bar codes.
- You may use a calculator.
- You should show all your working and use appropriate units.

INFORMATION

- The total mark for this paper is 40.
- The number of marks for each question or part question is shown in brackets [ ].

For Examiner's Use	
1	
2	
3	
4	
Total	

This document has **16** pages. Any blank pages are indicated.

© UCLES 2025

www.dynamicpapers.com

1 In this experiment, you will investigate the reflection of light by a plane mirror.

Use the separate ray-trace sheet provided. You may refer to Fig. 1.1 for guidance.

(a)
- Draw a line **LN** 12 cm long across the ray-trace sheet supplied, near to the top of the sheet.
- Label the mid-point of the line with the letter **M**.
- Draw a line **PR** parallel to line **LN** at a distance 12.0 cm below it across the full width of the page.
- Draw a normal to **LN** at the point **M**.
- Extend the normal downwards to the bottom of the page and label the end of the line **S**.
- Label the point where the normal line crosses **PR** with the letter **Q**. [1]

(b)
- Draw a line from point **M** at an angle $\theta = 10°$, as shown in Fig. 1.1.

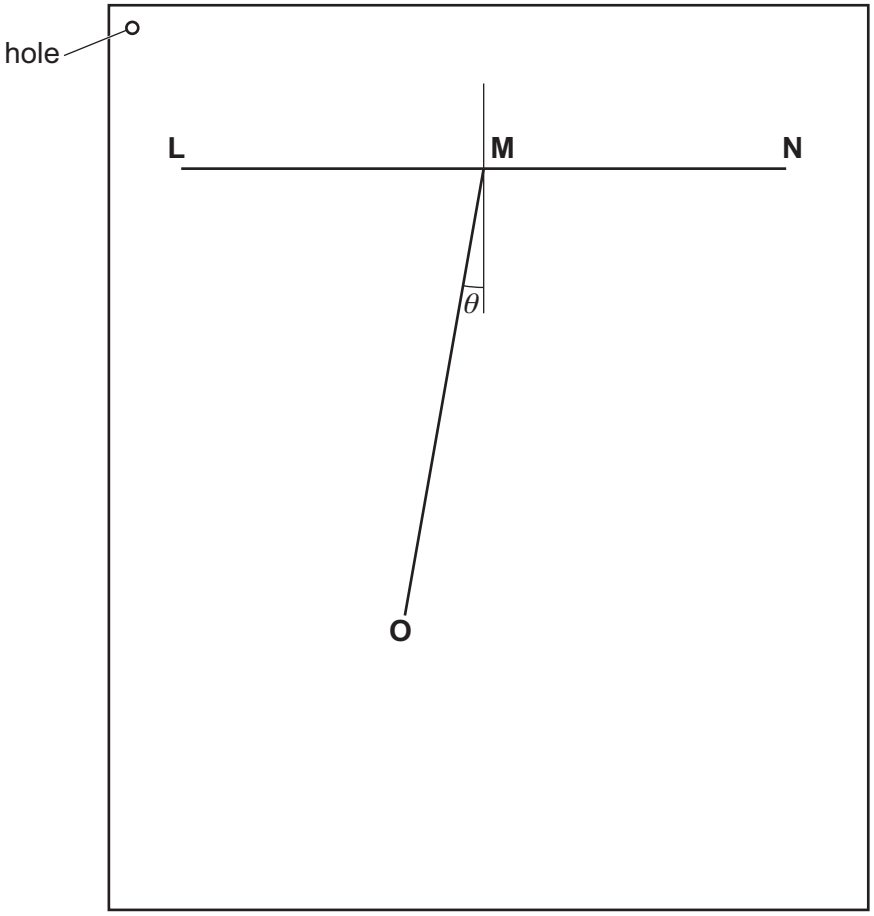

Fig. 1.1

- Extend the line downwards towards the bottom of the page and label the end of the line **O**. [1]

DO NOT WRITE IN THIS MARGIN
DO NOT WRITE IN THIS MARGIN
DO NOT WRITE IN THIS MARGIN
DO NOT WRITE IN THIS MARGIN
DO NOT WRITE IN THIS MARGIN

www.dynamicpapers.com

DO NOT WRITE IN THIS MARGIN
DO NOT WRITE IN THIS MARGIN
DO NOT WRITE IN THIS MARGIN
DO NOT WRITE IN THIS MARGIN
DO NOT WRITE IN THIS MARGIN

(c)
- Place the reflecting surface of the mirror along the line **LN**, facing the bottom of the page, and with the centre of the mirror at **M**.
- Position the light source and slit so that a ray of light passes along the line **OM** towards **M**.
- Mark two small crosses (x), a suitable distance apart on the ray reflected from the mirror.
- Remove the mirror and the illuminated slit. [1]

(d)
- Draw a line through the crosses and continue the line back to the mirror.
- Extend the line until it crosses line **PR**.
- Label the point at which the line meets **PR** with the letter **T**.

(i) Measure the length *a* of the line **QT** in centimetres to the nearest millimetre and the length *b* of the line **MT** in centimetres to the nearest millimetre. Record your measurements below and in Table 1.1.

a = ... cm

b = ... cm
[1]

(ii) Calculate the ratio $r = \frac{a}{b}$. Record your answer in Table 1.1.

Give your answer to 2 significant figures.

Table 1.1

θ / °	*a* / cm	*b* / cm	$r = \frac{a}{b}$
10			
20			
30			

[2]

(e) Repeat **(b)**, **(c)** and **(d)** for values of $\theta = 20°$ and $\theta = 30°$.

Record your results in Table 1.1. [1]

www.dynamicpapers.com

(f) A student says that r is directly proportional to θ.

State if you agree with the student's statement.

Use values from Table 1.1 to justify your answer.

statement .....

justification .....

.....

.....

[2]

(g) Suggest what you can do to have more confidence in your answer to part **(f)**.

.....

.....

..... [1]

(h) Suggest **one** source of inaccuracy in this experiment, even if it is carried out very carefully.

.....

..... [1]

[Total: 11]

Write your name, centre number and candidate number on your ray-trace sheet.
Tie your ray-trace sheet into this Booklet between pages 2 and 3.

DO NOT WRITE IN THIS MARGIN
DO NOT WRITE IN THIS MARGIN
DO NOT WRITE IN THIS MARGIN
DO NOT WRITE IN THIS MARGIN
DO NOT WRITE IN THIS MARGIN

www.dynamicpapers.com

BLANK PAGE

DO NOT WRITE IN THIS MARGIN
DO NOT WRITE IN THIS MARGIN
DO NOT WRITE IN THIS MARGIN
DO NOT WRITE IN THIS MARGIN
DO NOT WRITE IN THIS MARGIN

www.dynamicpapers.com

2 In this experiment, you will investigate an electric circuit and find the resistance of an unknown resistor Z.

The incomplete circuit shown in Fig. 2.1 has been set up for you. There is a gap between the points labelled X and Y.

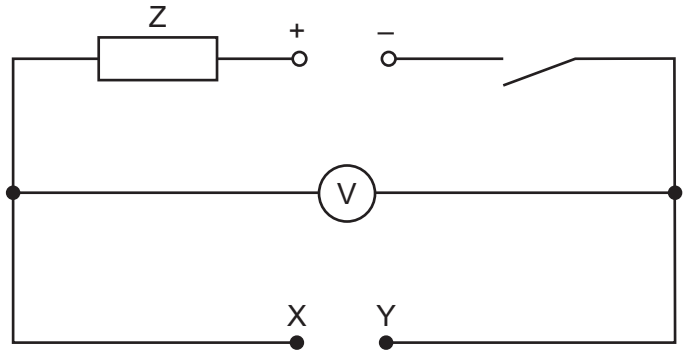

Fig. 2.1

(a)
- Close the switch.
- Without making any changes to the circuit, record the voltmeter reading V_0.
- Open the switch.

V_0 = ...V [1]

(b)
- Connect the 10 Ω resistor between points X and Y.
- Close the switch.
- Record, in Table 2.1, the reading V on the voltmeter.
- Open the switch.

Table 2.1

resistance R/Ω	voltmeter reading V/V	current I/A
10		
22		
39		
47		
68		

[1]

DO NOT WRITE IN THIS MARGIN
DO NOT WRITE IN THIS MARGIN
DO NOT WRITE IN THIS MARGIN
DO NOT WRITE IN THIS MARGIN
DO NOT WRITE IN THIS MARGIN

www.dynamicpapers.com

(c) Remove the 10 Ω resistor from the circuit.

Repeat part **(b)**, by replacing the 10 Ω resistor with resistors of 22 Ω, 39 Ω, 47 Ω and 68 Ω in turn. [2]

(d) For each pair of values of R and V in Table 2.1, calculate the current I in the circuit. Use the equation:

$$I = \frac{V}{R}$$

Record your values of I in Table 2.1 to 2 significant figures. [2]

(e) Plot a graph of V/V (y-axis) against I/A (x-axis). Start your axes at the origin (0, 0).

Draw a best-fit straight line.

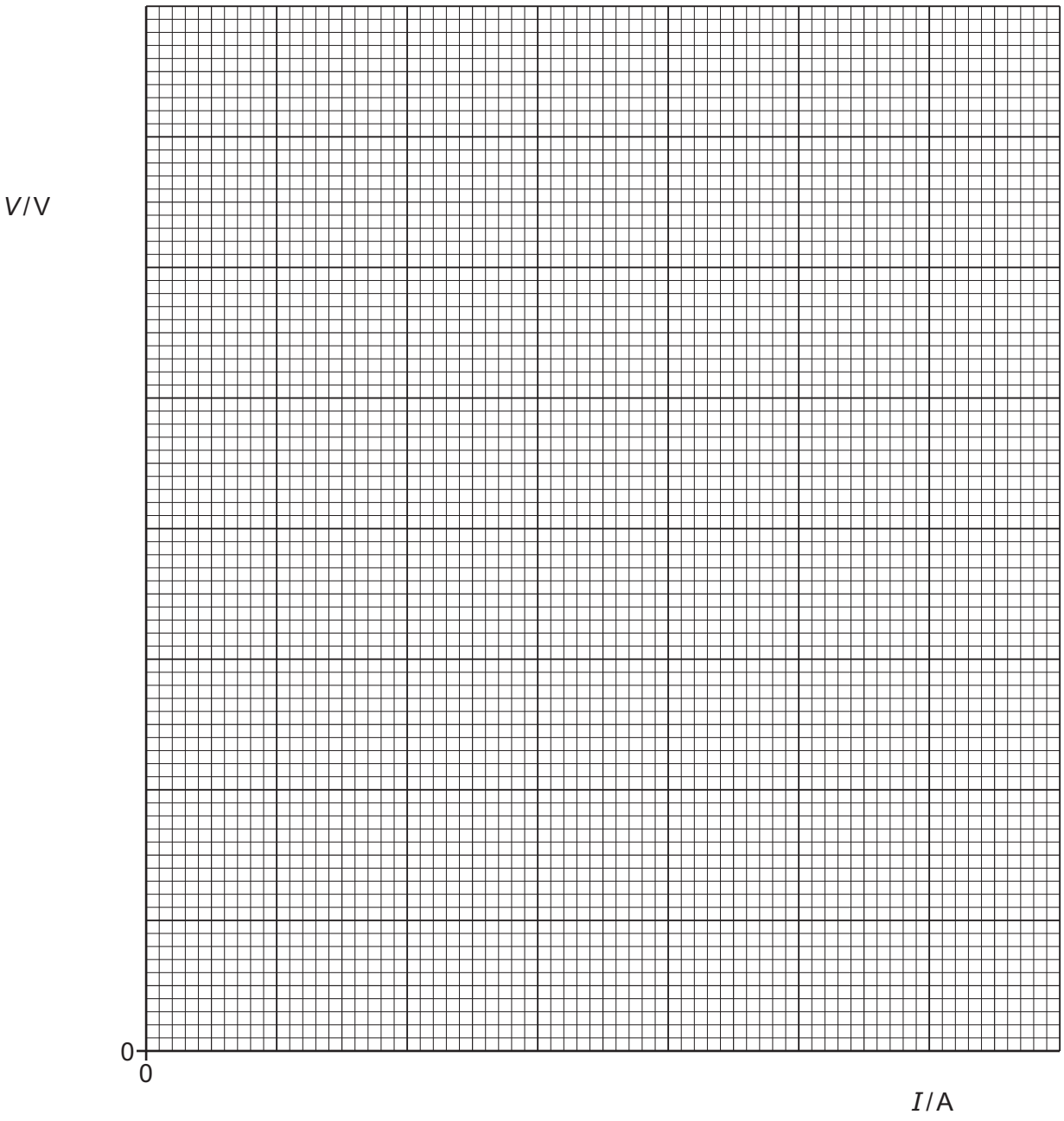

[3]

DO NOT WRITE IN THIS MARGIN
DO NOT WRITE IN THIS MARGIN
DO NOT WRITE IN THIS MARGIN
DO NOT WRITE IN THIS MARGIN
DO NOT WRITE IN THIS MARGIN

www.dynamicpapers.com

(f) Determine the gradient *G* of your line. Show all working and indicate on the graph the values you use.

G = ... [1]

(g) The gradient of your line is numerically equal to the resistance R_Z of the unknown resistor Z.

Write down the value of the resistance R_Z.

Record your answer to the nearest ohm.

R_Z = ... Ω [1]

[Total: 11]

DO NOT WRITE IN THIS MARGIN
DO NOT WRITE IN THIS MARGIN
DO NOT WRITE IN THIS MARGIN
DO NOT WRITE IN THIS MARGIN
DO NOT WRITE IN THIS MARGIN

www.dynamicpapers.com

BLANK PAGE

DO NOT WRITE IN THIS MARGIN
DO NOT WRITE IN THIS MARGIN
DO NOT WRITE IN THIS MARGIN
DO NOT WRITE IN THIS MARGIN
DO NOT WRITE IN THIS MARGIN

www.dynamicpapers.com

3 In this experiment, you will investigate the cooling of water.
The apparatus shown in Fig. 3.1 has been assembled for you.

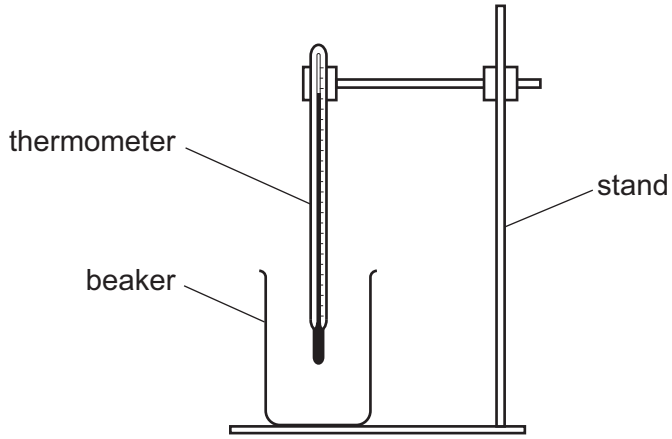

Fig. 3.1

(a) Measure and record the room temperature θ_R to the nearest 0.5 °C.

θ_R = ... °C [1]

(b) (i)
- Pour approximately 60 cm^3 of hot water into the beaker.
- Wait for 30 s.
- Measure and record in Table 3.1, the temperature θ of the water at time t = 0.
- Immediately start the stop-watch and measure the temperature of the water at one-minute intervals for 5 minutes.

Record in Table 3.1 the temperatures to the nearest 1 °C.

Table 3.1

time t / min	temperature θ / °C
0	
1	
2	
3	
4	
5	

[2]

DO NOT WRITE IN THIS MARGIN
DO NOT WRITE IN THIS MARGIN
DO NOT WRITE IN THIS MARGIN
DO NOT WRITE IN THIS MARGIN
DO NOT WRITE IN THIS MARGIN

www.dynamicpapers.com

DO NOT WRITE IN THIS MARGIN
DO NOT WRITE IN THIS MARGIN
DO NOT WRITE IN THIS MARGIN
DO NOT WRITE IN THIS MARGIN
DO NOT WRITE IN THIS MARGIN

(ii) Suggest why you wait for 30 s before measuring the initial temperature of the hot water.

.....

..... [1]

(iii) State how you ensure that the temperature readings are as accurate as possible.

.....

..... [1]

(c) **(i)** Calculate the decrease in temperature $\Delta\theta$ of the hot water during the **first two** minutes of cooling.

$\Delta\theta$ = ... °C [1]

(ii) Calculate the average rate of cooling R_1 of the hot water during the **first two** minutes of cooling.

Use the equation:

$$R_1 = \frac{\text{decrease in temperature}}{\text{time}}$$

R_1 = ... °C / min [1]

(iii) Calculate the average rate of cooling R_2 of the hot water during the **final two** minutes of cooling.

R_2 = ... °C / min [1]

(d) Use your answers to **(c)(ii)** and **(c)(iii)** to write a conclusion about the way in which hot water in a beaker cools.

.....

..... [1]

(e) The water in the beaker is left to continue cooling.

(i) Estimate the temperature of the water θ_5 after a further 5 minutes of cooling.

θ_5 = ... °C [1]

(ii) Estimate the temperature of the water θ_{50} after a further 50 minutes of cooling.

θ_{50} = ... °C [1]

[Total: 11]

www.dynamicpapers.com

4 A student sets up a flexible track on the laboratory bench.

The student investigates the motion of a metal ball as it rolls from rest down the track. The metal ball rolls down the track, up the other side of the track, and comes momentarily to rest at a height *h* above the bench before rolling back down again.

Plan an experiment to investigate how **one** variable affects the size of this height *h*.

The apparatus available includes:

- flexible track
- two clamps, bosses and stands to support the track
- selection of metal balls.

Fig. 4.1 shows how the flexible track is supported.

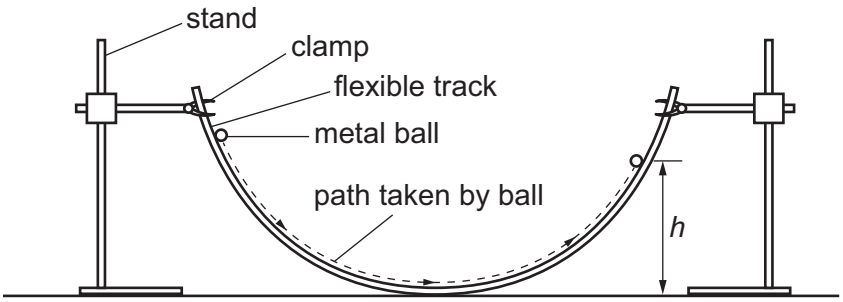

Fig. 4.1

You are **not** required to do the investigation.

In your plan:

- state the **one** variable you have chosen to investigate
- list any additional apparatus needed
- explain how to do the experiment
- state the key variables to be kept constant
- draw a table, with column headings, to show how to display the readings (you are **not** required to enter any readings in the table)
- explain how to use the readings to reach a conclusion.

DO NOT WRITE IN THIS MARGIN
DO NOT WRITE IN THIS MARGIN
DO NOT WRITE IN THIS MARGIN
DO NOT WRITE IN THIS MARGIN
DO NOT WRITE IN THIS MARGIN

DO NOT WRITE IN THIS MARGIN
DO NOT WRITE IN THIS MARGIN
DO NOT WRITE IN THIS MARGIN
DO NOT WRITE IN THIS MARGIN
DO NOT WRITE IN THIS MARGIN

.....

.....

.....

.....

.....

.....

.....

.....

.....

.....

.....

.....

.....

.....

.....

.....

.....

.....

..... [7]

www.dynamicpapers.com

BLANK PAGE

DO NOT WRITE IN THIS MARGIN
DO NOT WRITE IN THIS MARGIN
DO NOT WRITE IN THIS MARGIN
DO NOT WRITE IN THIS MARGIN
DO NOT WRITE IN THIS MARGIN

www.dynamicpapers.com

BLANK PAGE

DO NOT WRITE IN THIS MARGIN
DO NOT WRITE IN THIS MARGIN
DO NOT WRITE IN THIS MARGIN
DO NOT WRITE IN THIS MARGIN
DO NOT WRITE IN THIS MARGIN

www.dynamicpapers.com

BLANK PAGE

DO NOT WRITE IN THIS MARGIN
DO NOT WRITE IN THIS MARGIN
DO NOT WRITE IN THIS MARGIN
DO NOT WRITE IN THIS MARGIN
DO NOT WRITE IN THIS MARGIN

Permission to reproduce items where third-party owned material protected by copyright is included has been sought and cleared where possible. Every reasonable effort has been made by the publisher (UCLES) to trace copyright holders, but if any items requiring clearance have unwittingly been included, the publisher will be pleased to make amends at the earliest possible opportunity.

To avoid the issue of disclosure of answer-related information to candidates, all copyright acknowledgements are reproduced online in the Cambridge Assessment International Education Copyright Acknowledgements Booklet. This is produced for each series of examinations and is freely available to download at www.cambridgeinternational.org after the live examination series.

Cambridge Assessment International Education is part of Cambridge Assessment. Cambridge Assessment is the brand name of the University of Cambridge Local Examinations Syndicate (UCLES), which is a department of the University of Cambridge.

© UCLES 2025