www.dynamicpapers.com

Cambridge Assessment International Education

Cambridge IGCSE™

PHYSICS **0625/52**

Paper 5 Practical Test **October/November 2025**

CONFIDENTIAL INSTRUCTIONS

2234066151

This document gives details of how to prepare for and administer the practical exam.

The information in this document and the identity of any materials supplied by Cambridge International are confidential and must NOT reach candidates either directly or indirectly.

The supervisor must complete the report at the end of this document and return it with the scripts.

INSTRUCTIONS

- If you have any queries regarding these confidential instructions, contact Cambridge International stating the centre number, the syllabus and component number and the nature of the query.
  email info@cambridgeinternational.org
  phone +44 1223 553554

DC (PB/SW) 346260/2
© UCLES 2025

[Turn over

www.dynamicpapers.com

General information about practical exams

Centres must follow the guidance on science practical exams given in the *Cambridge Handbook*.

Safety

Supervisors must follow national and local regulations relating to safety and first aid.

Only those procedures described in the question paper should be attempted.

Supervisors must inform candidates that materials and apparatus used in the exam should be treated with caution. Suitable eye protection should be used where necessary.

The following hazard codes are used in these confidential instructions, where relevant:

C	corrosive	**MH**	moderate hazard
HH	health hazard	**T**	acutely toxic
F	flammable	**O**	oxidising
N	hazardous to the aquatic environment		

Hazard data sheets relating to substances used in this exam should be available from your chemical supplier.

Before the exam

- The packets containing the question papers must **not** be opened before the exam.
- It is assumed that standard school laboratory facilities, as indicated in the *Guide to Planning Practical Science*, will be available.
- Spare materials and apparatus for the tasks set must be available for candidates, if required.

During the exam

- It must be made clear to candidates at the start of the exam that they may request spare materials and apparatus for the tasks set.
- Where specified, the supervisor **must** perform the experiments and record the results as instructed. This must be done **out of sight** of the candidates, using the same materials and apparatus as the candidates.
- Any assistance provided to candidates must be recorded in the supervisor's report.
- If any materials or apparatus need to be replaced, for example, in the event of breakage or loss, this must be recorded in the supervisor's report.

After the exam

- The supervisor must complete a report for each practical session held and each laboratory used.
- Each packet of scripts returned to Cambridge International must contain the following items:
  - the scripts of the candidates specified on the bar code label provided
  - the supervisor's results relevant to these candidates
  - the supervisor's reports relevant to these candidates
  - seating plans for each practical session, referring to each candidate by candidate number
  - the attendance register.

© UCLES 2025

www.dynamicpapers.com

During the exam, the supervisor (NOT the invigilator) must do the experiments in Questions 1, 2 and 3 and record the results on a spare copy of the question paper, clearly labelled 'supervisor's results'.

Question 1

Items to be supplied by the centre (per set of apparatus, unless otherwise specified)

(i) Sheet of plain A4 paper (per candidate) with a hole in one corner so that it can be tied into the question booklet. See note 1.

(ii) Rectangular, plane mirror, mounted in a holder so that it is perpendicular to the bench.

(iii) 30 cm ruler with a millimetre scale – candidates may use their own.

(iv) Protractor – candidates may use their own.

(v) Illuminated slit. See note 2.

Notes

1 Spare sheets of plain paper should be available (as in **(i)**).

2 A sheet of stiff card or thin wood, approximately 60 mm × 60 mm, fixed to a wooden support is suitable. The sheet must have a slit 30 mm long and 1 mm to 2 mm wide, as shown in Fig. 1.1.

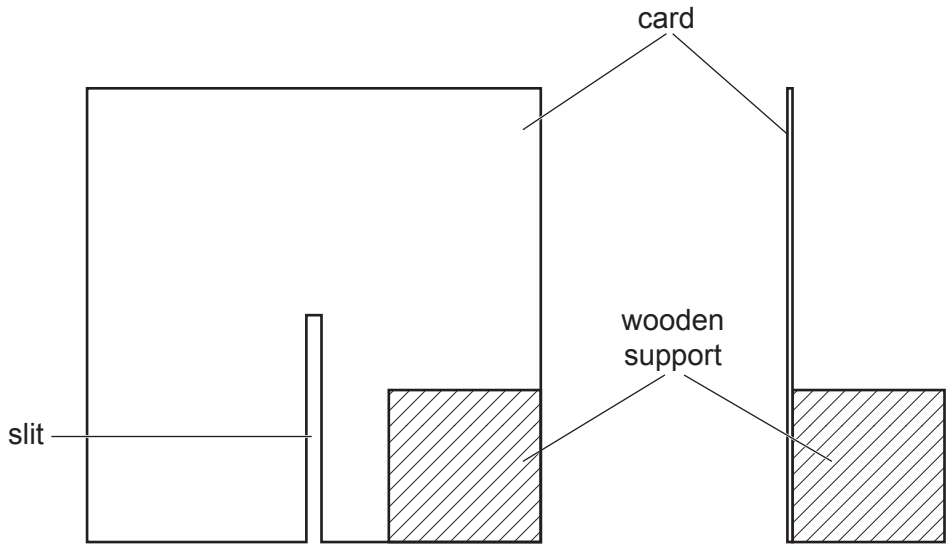

Fig. 1.1

The filament lamp for the illuminated slit should be a low voltage lamp, 24 W or greater, with a suitable power supply. An LED lamp with equivalent brightness can be used.

The lamp, placed behind the stiff card, must be capable of projecting a beam of light at least 25 cm long across a sheet of paper.

A ray box with a slit can be used, if available.

3 The apparatus should be set up in a dimly lit area of the laboratory, if possible.

www.dynamicpapers.com

Action at changeover

Supply a plain sheet of A4 paper (as in **(i)**).
Check that the apparatus is intact and still working.
Switch off the lamp.

Question 2

Items to be supplied by the centre (per set of apparatus, unless otherwise specified)

(i) 3–4 V power supply. See note 2.

(ii) Switch (the switch can be an integral part of the power supply).

(iii) Voltmeter capable of measuring the supply e.m.f. with a precision of 0.1 V or better. See note 3.

(iv) Resistor of resistance 22 Ω with a power rating of at least 1 W, labelled Z. See note 4.

(v) Resistors of resistances 10 Ω, 22 Ω, 39 Ω, 47 Ω and 68 Ω with a power rating of at least 1 W. See note 5.

(vi) Sufficient connecting leads to set up the circuit shown in Fig. 2.1.

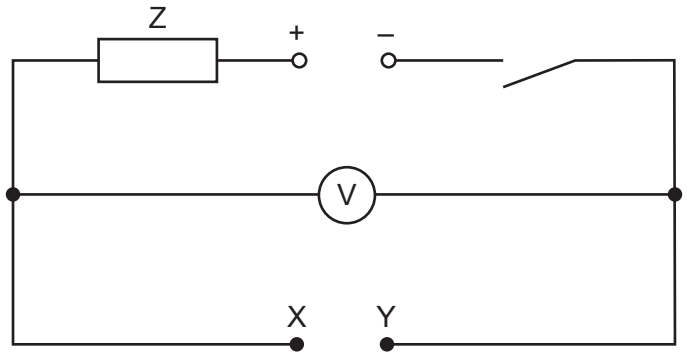

Fig. 2.1

Notes

1 The supervisor must set up the circuit shown in Fig. 2.1 for the candidates in advance of the examination. Terminals X and Y must be labelled and have suitable terminals to connect to the resistors.

2 The following are suitable power sources:

- two 1.5 V dry cells in suitable holders connected in series
- three 1.2 V rechargeable cells in suitable holders connected in series
- d.c. power supply of 3–4 V.

Where candidates are supplied with a power supply with a variable output voltage, the voltage setting should be set by the supervisor and fixed (e.g., taped).

3 An analogue or a digital meter is suitable.

© UCLES 2025

www.dynamicpapers.com

4 The resistor must have suitable terminals to enable it to be connected into the circuit.
The RS Components International component code of a suitable resistor is 707–8808. The resistor must have its colour coding covered by opaque sticky tape to ensure that it is not visible to the candidate.

5 The resistors must be labelled 10 Ω, 22 Ω, 39 Ω, 47 Ω and 68 Ω. The supervisor must label the resistors with their values.

The RS Components International component codes of suitable resistors are

10 Ω: 707–8782
22 Ω: 707–8808
39 Ω: 707–8814
47 Ω: 707–8817
68 Ω: 707–8820

The resistors must have suitable terminals to enable them to be connected into the rest of the circuit.

Action at changeover

The circuit must be restored to its original state as shown in Fig. 2.1, with the switch open and the additional resistors placed by the side of the circuit.

Question 3

Items to be supplied by the centre (per set of apparatus, unless otherwise specified)

(i) 100 cm^3 glass beaker. See note 1.

(ii) Thermometer −10 °C to 110 °C graduated in 1 °C intervals. See note 1.

(iii) Stop-watch.

(iv) Clamp, boss and stand.

(v) Supply of hot water. See notes 2 and 3.

(vi) Supply of paper towels to mop up any spillages.

Notes

1 The beaker and the thermometer must be supplied to candidates as shown in Fig. 3.1. If the beaker does not have graduations, an indelible mark must be drawn at the 50 cm^3 level and labelled '50 cm^3'.
The thermometer must be clamped such that the bulb is below the 50 cm^3 level of the beaker.

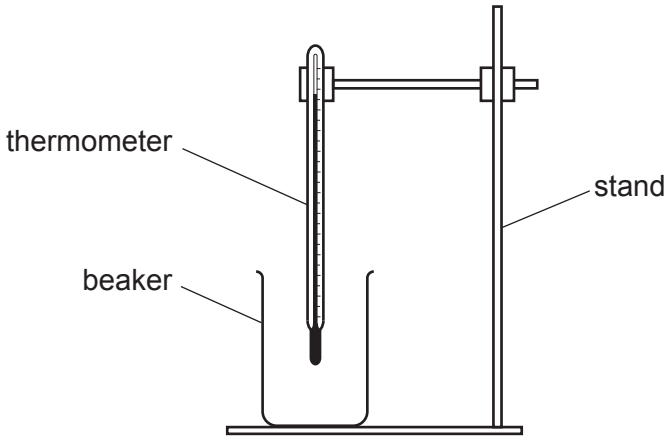

Fig. 3.1

www.dynamicpapers.com

2 Each candidate will be required to pour approximately 60 cm^3 of hot water into the beaker. The hot water should be supplied and maintained at a constant temperature of between approximately 80 °C and 90 °C.

3 Candidates should be warned of the dangers of burns and scalds when using very hot water.

4 Spare beakers and thermometers should be available in case of breakages.

Action at Changeover

Remove the water from the beaker and dry the thermometer.
Restore the apparatus to the set-up shown in Fig. 3.1.

Question 4

No apparatus is required for this question.

Permission to reproduce items where third-party owned material protected by copyright is included has been sought and cleared where possible. Every reasonable effort has been made by the publisher (UCLES) to trace copyright holders, but if any items requiring clearance have unwittingly been included, the publisher will be pleased to make amends at the earliest possible opportunity.

To avoid the issue of disclosure of answer-related information to candidates, all copyright acknowledgements are reproduced online in the Cambridge Assessment International Education Copyright Acknowledgements Booklet. This is produced for each series of examinations and is freely available to download at www.cambridgeinternational.org after the live examination series.

Cambridge Assessment International Education is part of Cambridge Assessment. Cambridge Assessment is the brand name of the University of Cambridge Local Examinations Syndicate (UCLES), which is a department of the University of Cambridge.

© UCLES 2025

www.dynamicpapers.com

Supervisor's report

Syllabus and component number | | | | | / | | |

Centre number | | | | | |

Centre name .....

Time of the practical session .....

Laboratory name/number .....

Give details of any difficulties experienced by the centre or by candidates (include the relevant candidate names and candidate numbers).

You must include:
- any difficulties experienced by the centre in the preparation of materials
- any difficulties experienced by candidates, e.g. due to faulty materials or apparatus
- any specific assistance given to candidates.

© UCLES 2025

[Turn over

www.dynamicpapers.com

Declaration

1 Each packet that I am returning to Cambridge International contains all of the following items:
- the scripts of the candidates specified on the bar code label provided
- the supervisor's results relevant to these candidates
- the supervisor's reports relevant to these candidates
- seating plans for each practical session, referring to each candidate by candidate number
- the attendance register.

2 Where the practical exam has taken place in more than one practical session, I have clearly labelled the supervisor's results, supervisor's reports and seating plans with the time and laboratory name/number for each practical session.

3 I have included details of difficulties relating to each practical session experienced by the centre or by candidates.

4 I have reported any other adverse circumstances affecting candidates, e.g. illness, bereavement or temporary injury, directly to Cambridge International on a *special consideration form*.

Signed ..... (supervisor)

Name (in block capitals) .....

© UCLES 2025