www.dynamicpapers.com

Cambridge Assessment International Education

Cambridge IGCSE™

PHYSICS **0625/53**

Paper 5 Practical Test **May/June 2024**

CONFIDENTIAL INSTRUCTIONS

1660591054

This document gives details of how to prepare for and administer the practical exam.

The information in this document and the identity of any materials supplied by Cambridge International are confidential and must NOT reach candidates either directly or indirectly.

The supervisor must complete the report at the end of this document and return it with the scripts.

INSTRUCTIONS

- If you have any queries regarding these confidential instructions, contact Cambridge International stating the centre number, the syllabus and component number and the nature of the query.
  email info@cambridgeinternational.org
  phone +44 1223 553554

DC (CJ/CT) 329885/2
© UCLES 2024

[Turn over

www.dynamicpapers.com

General information about practical exams

Centres must follow the guidance on science practical exams given in the *Cambridge Handbook*.

Safety

Supervisors must follow national and local regulations relating to safety and first aid.

Only those procedures described in the question paper should be attempted.

Supervisors must inform candidates that materials and apparatus used in the exam should be treated with caution. Suitable eye protection should be used where necessary.

Before the exam

- The packets containing the question papers must **not** be opened before the exam.
- It is assumed that standard school laboratory facilities, as indicated in the *Guide to Planning Practical Science*, will be available.
- Spare materials and apparatus for the tasks set must be available for candidates, if required.

During the exam

- It must be made clear to candidates at the start of the exam that they may request spare materials and apparatus for the tasks set.
- Where specified, the supervisor **must** perform the experiments and record the results as instructed. This must be done **out of sight** of the candidates, using the same materials and apparatus as the candidates.
- Any assistance provided to candidates must be recorded in the supervisor's report.
- If any materials or apparatus need to be replaced, for example, in the event of breakage or loss, this must be recorded in the supervisor's report.

After the exam

- The supervisor must complete a report for each practical session held and each laboratory used.
- Each packet of scripts returned to Cambridge International must contain the following items:
  - the scripts of the candidates specified on the bar code label provided
  - the supervisor's results relevant to these candidates
  - the supervisor's reports relevant to these candidates
  - seating plans for each practical session, referring to each candidate by candidate number
  - the attendance register.

© UCLES 2024

www.dynamicpapers.com

Specific information for this practical exam

During the exam, the supervisor (not the invigilator) must do the experiments in Questions 1, 2 and 3 and record the results on a spare copy of the question paper, clearly labelled 'supervisor's results'.

Question 1

Items to be supplied by the centre (per set of apparatus, unless otherwise specified)

(i) Piece of modelling clay, of mass approximately 80 g, labelled 'block A'. See notes 1 and 2.

(ii) Piece of modelling clay, of mass approximately 30 g, labelled 'block B'.
A loop of strong thread or thin string must be incorporated so that the modelling clay can be suspended from the force meter and be immersed in water in the measuring cylinder. See notes 1 and 3.

(iii) Top-pan balance capable of measuring masses up to 200 g with a resolution of at least 0.1 g. See note 4.

(iv) Force meter capable of measuring forces up to 1.0 N with a resolution of at least 0.1 N. Ensure that the force meter is zeroed.

(v) 100 cm^3 measuring cylinder. A 250 cm^3 measuring cylinder with graduations of no larger than 2 cm^3 is an acceptable alternative.

(vi) 30 cm ruler, graduated in mm. Candidates may use their own.

(vii) Supply of water. See note 5.

(viii) Paper towels to soak up any water spillages.

(ix) Some spare blocks of modelling clay, as in **(i)** and **(ii)**, must be available at changeover.

Notes

1. The modelling clay must be non-porous and able to keep its shape when immersed in water. Plasticine® is suitable.

2. Block A must be moulded by hand into an approximately rectangular solid, as shown in Fig. 1.1. The exact dimensions are not important, but the length, width and height must have different values from each other. The edges should not be completely straight.

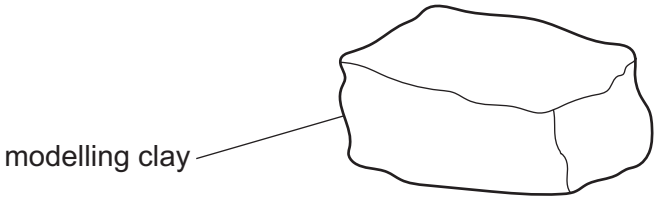

Fig. 1.1

© UCLES 2024

[Turn over

www.dynamicpapers.com

3. The shape of block B is not important, but the block suspended from the loop of thread must be able to be totally immersed in water in the measuring cylinder without touching the sides.

4. The top-pan balance may be shared, but candidates must have quick and easy access to a balance throughout the experiment.

5. Each candidate will require approximately 100 cm^3 of water. The temperature of the water is not important.

Action at changeover

Ensure that the measuring cylinder is empty.
Ensure that the modelling clay is reasonably dry.
Ensure that the blocks of modelling clay are correctly labelled and shaped, as specified in notes 2 and 3.
Ensure that the force meter is set to zero when the force meter is held vertically.

Question 2

Items to be supplied by the centre (per set of apparatus, unless otherwise specified)

(i) 250 cm^3 beaker. See note 1.

(ii) Thermometer: –10 °C to 110 °C, graduated in 1 °C intervals.

(iii) Clamp, boss and stand. See note 2.

(iv) Supply of hot water. See notes 3 and 4.

(v) Stop-watch or stop-clock or wall-mounted clock showing seconds. The question will refer to a stop-watch.

(vi) Paper towels to soak up any water spills.

Notes

1. If the beaker is not graduated, the 75 cm^3 and 200 cm^3 levels must be marked on the side of the beaker.

2. The thermometer, clamp, boss and stand are to be set up for candidates as shown in Fig. 2.1. The thermometer bulb must be well below the 75 cm^3 level of the beaker.
Candidates must be able easily and safely to read temperatures up to 100 °C and to move the thermometer into and out of the beaker.

© UCLES 2024

www.dynamicpapers.com

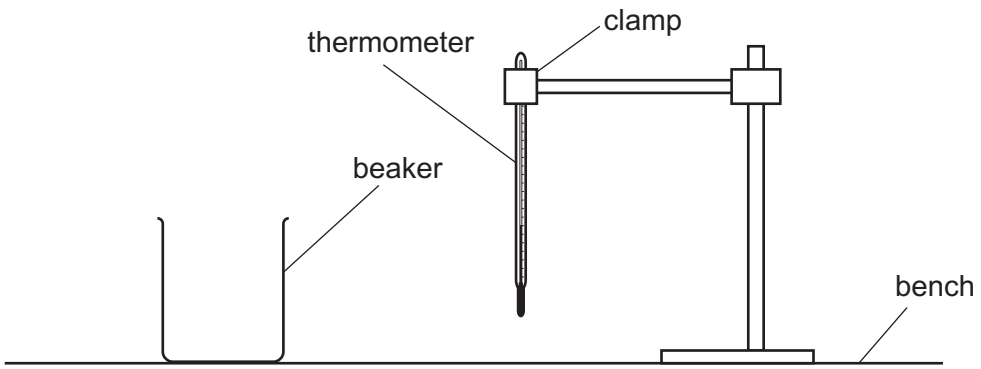

Fig. 2.1

3. Hot water must be available for each candidate throughout the experiment. The hot water must be maintained at an approximately constant temperature of at least 80 °C. Each candidate will require about 300 cm^3 of hot water in total. Candidates must be able to pour hot water into and out of the beaker safely.

4. Candidates must be warned of the dangers of burns or scalds when using very hot water.

5. Spare thermometers must be available.

Action at changeover

Empty the water from the beaker.
Check that the apparatus is intact and is arranged as in Fig. 2.1.

Question 3

Items to be supplied by the centre (per set of apparatus, unless otherwise specified)

(i) Converging lens, focal length between 14 cm and 16 cm, with a suitable holder.

(ii) Metre ruler, graduated in mm.

(iii) Illuminated object consisting of a rigid card with a triangular hole of height 2.0 cm. See Fig. 3.1.
The hole is to be covered with thin translucent paper (e.g. tracing paper) secured with adhesive tape. See note 1.

(iv) Plain white screen. A white sheet of stiff card, approximately 150 mm × 150 mm and fixed to a wooden support, is suitable. See Fig. 3.2.

(v) 30 cm ruler, graduated in mm. Candidates may use their own.

Notes

1. The filament lamp for the illuminated object should be a low voltage lamp, 24 W or greater, with a suitable power supply. An LED lamp with equivalent brightness can be used.

2. The centre of the triangular hole which forms the object and the centre of the lens in its holder must be at the same height above the bench.

© UCLES 2024

www.dynamicpapers.com

3. The apparatus is to be situated away from direct sunlight.

4. Spare lamps must be available.

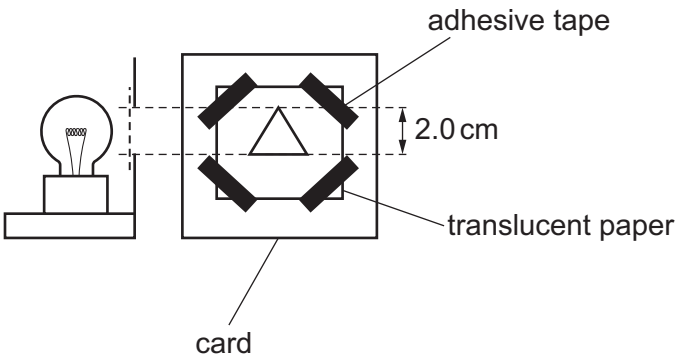

Fig. 3.1

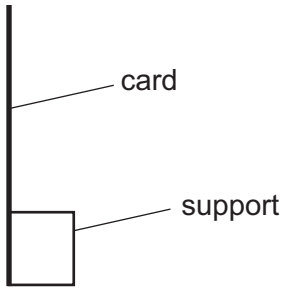

Fig. 3.2

Action at changeover

Check that the apparatus is intact and that the lamp is working.
Switch off the lamp.
Place the illuminated object, lens and screen next to each other on the bench.

Question 4

No apparatus is required for this question.

Permission to reproduce items where third-party owned material protected by copyright is included has been sought and cleared where possible. Every reasonable effort has been made by the publisher (UCLES) to trace copyright holders, but if any items requiring clearance have unwittingly been included, the publisher will be pleased to make amends at the earliest possible opportunity.

To avoid the issue of disclosure of answer-related information to candidates, all copyright acknowledgements are reproduced online in the Cambridge Assessment International Education Copyright Acknowledgements Booklet. This is produced for each series of examinations and is freely available to download at www.cambridgeinternational.org after the live examination series.

Cambridge Assessment International Education is part of Cambridge Assessment. Cambridge Assessment is the brand name of the University of Cambridge Local Examinations Syndicate (UCLES), which is a department of the University of Cambridge.

© UCLES 2024

www.dynamicpapers.com

Supervisor's report

Syllabus and component number | | | | | / | | |

Centre number | | | | | |

Centre name .....

Time of the practical session .....

Laboratory name/number .....

Give details of any difficulties experienced by the centre or by candidates (include the relevant candidate names and candidate numbers).

You must include:

- any difficulties experienced by the centre in the preparation of materials
- any difficulties experienced by candidates, e.g. due to faulty materials or apparatus
- any specific assistance given to candidates.

© UCLES 2024

[Turn over

www.dynamicpapers.com

Declaration

1 Each packet that I am returning to Cambridge International contains all of the following items:
- the scripts of the candidates specified on the bar code label provided
- the supervisor's results relevant to these candidates
- the supervisor's reports relevant to these candidates
- seating plans for each practical session, referring to each candidate by candidate number
- the attendance register.

2 Where the practical exam has taken place in more than one practical session, I have clearly labelled the supervisor's results, supervisor's reports and seating plans with the time and laboratory name/number for each practical session.

3 I have included details of difficulties relating to each practical session experienced by the centre or by candidates.

4 I have reported any other adverse circumstances affecting candidates, e.g. illness, bereavement or temporary injury, directly to Cambridge International on a *special consideration form*.

Signed ..... (supervisor)

Name (in block capitals) .....

© UCLES 2024