www.dynamicpapers.com

Cambridge Assessment International Education

Cambridge IGCSE™

PHYSICS **0625/52**

Paper 5 Practical Test **May/June 2024**

CONFIDENTIAL INSTRUCTIONS

2423111465

This document gives details of how to prepare for and administer the practical exam.

The information in this document and the identity of any materials supplied by Cambridge International are confidential and must NOT reach candidates either directly or indirectly.

The supervisor must complete the report at the end of this document and return it with the scripts.

INSTRUCTIONS

- If you have any queries regarding these confidential instructions, contact Cambridge International stating the centre number, the syllabus and component number and the nature of the query.
  email info@cambridgeinternational.org
  phone +44 1223 553554

DC (PQ/JG) 329446/2
© UCLES 2024

[Turn over

www.dynamicpapers.com

General information about practical exams

Centres must follow the guidance on science practical exams given in the *Cambridge Handbook*.

Safety

Supervisors must follow national and local regulations relating to safety and first aid.

Only those procedures described in the question paper should be attempted.

Supervisors must inform candidates that materials and apparatus used in the exam should be treated with caution. Suitable eye protection should be used where necessary.

Before the exam

- The packets containing the question papers must **not** be opened before the exam.
- It is assumed that standard school laboratory facilities, as indicated in the *Guide to Planning Practical Science*, will be available.
- Spare materials and apparatus for the tasks set must be available for candidates, if required.

During the exam

- It must be made clear to candidates at the start of the exam that they may request spare materials and apparatus for the tasks set.
- Where specified, the supervisor **must** perform the experiments and record the results as instructed. This must be done **out of sight** of the candidates, using the same materials and apparatus as the candidates.
- Any assistance provided to candidates must be recorded in the supervisor's report.
- If any materials or apparatus need to be replaced, for example, in the event of breakage or loss, this must be recorded in the supervisor's report.

After the exam

- The supervisor must complete a report for each practical session held and each laboratory used.
- Each packet of scripts returned to Cambridge International must contain the following items:
  - the scripts of the candidates specified on the bar code label provided
  - the supervisor's results relevant to these candidates
  - the supervisor's reports relevant to these candidates
  - seating plans for each practical session, referring to each candidate by candidate number
  - the attendance register.

© UCLES 2024

www.dynamicpapers.com

Specific information for this practical exam

During the exam, the supervisor (NOT the invigilator) must do the experiments in Questions 1 and 2 and record the results on a spare copy of the question paper, clearly labelled 'supervisor's results'.

Question 1

Items to be supplied by the centre (per set of apparatus, unless otherwise specified)

(i) Steel spring. See note 1.

(ii) Clamp, boss and stand. See note 2.

(iii) 30 cm ruler, graduated in millimetres.

(iv) 100 g mass hanger and four 100 g slotted masses. See note 3.

(v) Stop-watch with a minimum precision of 0.1 s.

Notes

1. Expendable spring capable of supporting at least 500 g without overstretching (e.g. Philip Harris expendable steel spring, www.philipharris.co.uk). Spare springs should be available.

2. The clamp must be a suitable height above the bench so that when a load of 500 g is placed on the spring, the bottom of the load is at least 15 cm above the bench.
The base of the stand should be secured with a G-clamp and/or a weight.

3. If these are not available, a suitable light hook must be provided so that the masses can be suspended from the spring.

Action at changeover

Remove the mass hanger from the spring and place the spring and the mass hanger on the bench along with the other masses.

© UCLES 2024

[Turn over

www.dynamicpapers.com

Question 2

Items to be supplied by the centre (per set of apparatus, unless otherwise specified)

(i) Power supply of 4.5–5 V. See note 1.

(ii) Ammeter capable of measuring current of up to 1.00 A with a precision of at least 0.05 A. See note 2.

(iii) Voltmeter capable of measuring the supply p.d. with a precision of at least 0.1 V. See note 2.

(iv) Semiconducting diode. See note 3.

(v) Three resistors, one of nominal value 3.3 Ω, one of nominal value 6.8 Ω and one of nominal value 10 Ω. See notes 4 and 5.

(vi) Sufficient connecting leads to set up the circuit shown in Fig. 2.1. See note 6.

(vii) Two additional connecting leads to be placed by the side of the circuit.

Notes

1. The following are suitable power sources:

- three 1.5 V dry cells in suitable holders connected in series
- four 1.2 V rechargeable cells in suitable holders connected in series
- d.c. power supply of 4–5 V.

Where candidates are supplied with a power supply with a variable output voltage, the voltage setting should be set by the supervisor and fixed (e.g. taped).

2. Either analogue or digital meters are suitable. Any variable settings should be set by the supervisor and fixed (e.g. taped). Spare meters must be available.

3. The diode must be able to withstand a current of 0.5 A, with a power rating of at least 0.5 W. The diode must have suitable terminals so that it can be connected into the circuit. A 1N4001 diode is suitable (RS component code 751-2718).

4. The resistors should be labelled '3 Ω', '7 Ω' and '10 Ω'. The resistors should have a power rating of 3 W or higher and must have suitable terminals so that they can be connected into the circuit. The RS component code of a suitable 3.3 Ω resistor is RS 151-619. The RS component code of a suitable 6.8 Ω resistor is RS 485-1672. The RS component code of a suitable 10 Ω resistor is RS 762-9380.

5. The resistors labelled '3 Ω' and '7 Ω' must be placed by the side of the circuit shown in Fig. 2.1.

6. The supervisor must set up the circuit as shown in Fig. 2.1. The terminals X and Y must be clearly labelled. The supervisor must check the circuit by closing the switch. Readings should be obtained on the ammeter and voltmeter. If the ammeter reading is zero, the supervisor should check that the diode has not been connected the wrong way around.
After this check has been carried out, the switch must be opened.

© UCLES 2024

www.dynamicpapers.com

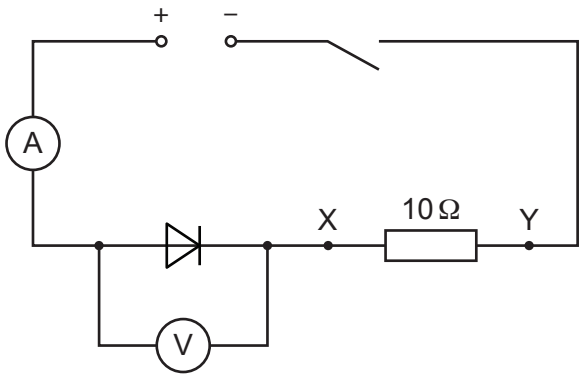

Fig. 2.1

Action at changeover

Restore the circuit to its original state, as shown in Fig. 2.1, and check that the voltmeter and ammeter readings have not changed significantly. If the current is zero, then the diode must be replaced. If cells are used, they may need to be replaced.

Question 3

Items to be supplied by the centre (per set of apparatus, unless otherwise specified)

(i) Rectangular transparent glass or acrylic (Perspex) block, 10 cm × 6 cm × 1.5 cm or similar size.

(ii) 30 cm ruler with a millimetre scale – candidates may use their own.

(iii) Protractor – candidates may use their own.

(iv) Illuminated slit. See note 1.

© UCLES 2024

www.dynamicpapers.com

Notes

1. A sheet of stiff card or thin wood, approximately 60 mm × 60 mm, fixed to a wooden support is suitable.
The sheet must have a slit 30 mm long and 1 mm to 2 mm wide, as shown in Fig. 3.1.

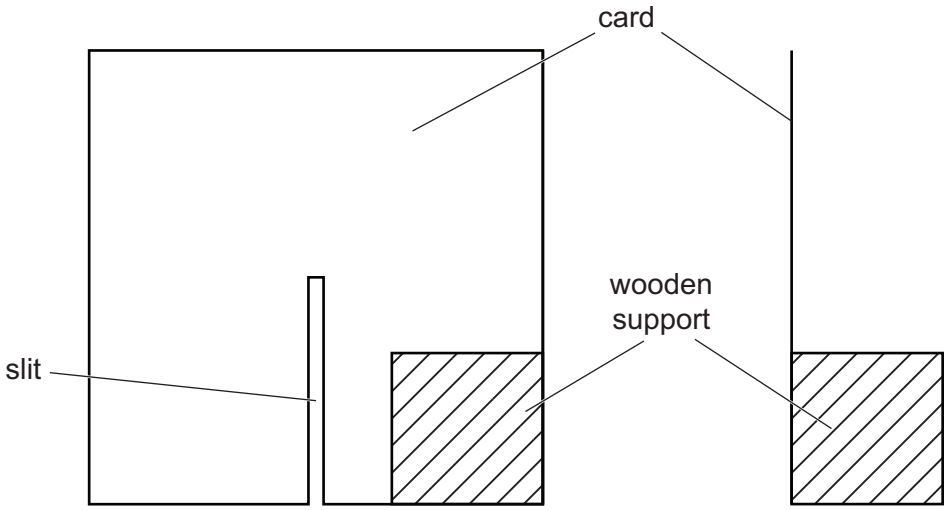

Fig. 3.1

The filament lamp for the illuminated slit should be a low voltage lamp, 24 W or greater, with a suitable power supply. An LED lamp with equivalent brightness can be used.

The lamp, placed behind the stiff card, must be capable of projecting a beam of light at least 25 cm long across a sheet of paper before and after refraction by the block.

A ray box with a slit can be used, if available.

2. The apparatus should be set up in a dimly lit area of the laboratory, if possible.

Action at changeover

Check that the apparatus is intact and still working.

Switch off the lamp.

Question 4

No apparatus is required for this question.

Permission to reproduce items where third-party owned material protected by copyright is included has been sought and cleared where possible. Every reasonable effort has been made by the publisher (UCLES) to trace copyright holders, but if any items requiring clearance have unwittingly been included, the publisher will be pleased to make amends at the earliest possible opportunity.

To avoid the issue of disclosure of answer-related information to candidates, all copyright acknowledgements are reproduced online in the Cambridge Assessment International Education Copyright Acknowledgements Booklet. This is produced for each series of examinations and is freely available to download at www.cambridgeinternational.org after the live examination series.

Cambridge Assessment International Education is part of Cambridge Assessment. Cambridge Assessment is the brand name of the University of Cambridge Local Examinations Syndicate (UCLES), which is a department of the University of Cambridge.

© UCLES 2024

www.dynamicpapers.com

Supervisor's report

Syllabus and component number | | | | | / | | |

Centre number | | | | | |

Centre name .....

Time of the practical session .....

Laboratory name/number .....

Give details of any difficulties experienced by the centre or by candidates (include the relevant candidate names and candidate numbers).

You must include:

- any difficulties experienced by the centre in the preparation of materials
- any difficulties experienced by candidates, e.g. due to faulty materials or apparatus
- any specific assistance given to candidates.

© UCLES 2024

[Turn over

www.dynamicpapers.com

Declaration

1 Each packet that I am returning to Cambridge International contains all of the following items:
- the scripts of the candidates specified on the bar code label provided
- the supervisor's results relevant to these candidates
- the supervisor's reports relevant to these candidates
- seating plans for each practical session, referring to each candidate by candidate number
- the attendance register.

2 Where the practical exam has taken place in more than one practical session, I have clearly labelled the supervisor's results, supervisor's reports and seating plans with the time and laboratory name/number for each practical session.

3 I have included details of difficulties relating to each practical session experienced by the centre or by candidates.

4 I have reported any other adverse circumstances affecting candidates, e.g. illness, bereavement or temporary injury, directly to Cambridge International on a *special consideration form*.

Signed ..... (supervisor)

Name (in block capitals) .....

© UCLES 2024