www.dynamicpapers.com

Cambridge Assessment International Education

Cambridge IGCSE™

CANDIDATE NAME

CENTRE NUMBER | | | | | |

CANDIDATE NUMBER | | | | |

3522406348

PHYSICS **0625/52**

Paper 5 Practical Test **February/March 2021**

1 hour 15 minutes

You must answer on the question paper.

You will need: The materials and apparatus listed in the confidential instructions

INSTRUCTIONS

- Answer **all** questions.
- Use a black or dark blue pen. You may use an HB pencil for any diagrams or graphs.
- Write your name, centre number and candidate number in the boxes at the top of the page.
- Write your answer to each question in the space provided.
- Do **not** use an erasable pen or correction fluid.
- Do **not** write on any bar codes.
- You may use a calculator.
- You should show all your working and use appropriate units.

INFORMATION

- The total mark for this paper is 40.
- The number of marks for each question or part question is shown in brackets [ ].

For Examiner's Use	
1	
2	
3	
4	
Total	

This document has **12** pages. Any blank pages are indicated.

© UCLES 2021

[Turn over

www.dynamicpapers.com

1 In this experiment, you will investigate the motion of an oscillating metre rule.

Carry out the following instructions, referring to Fig. 1.1.

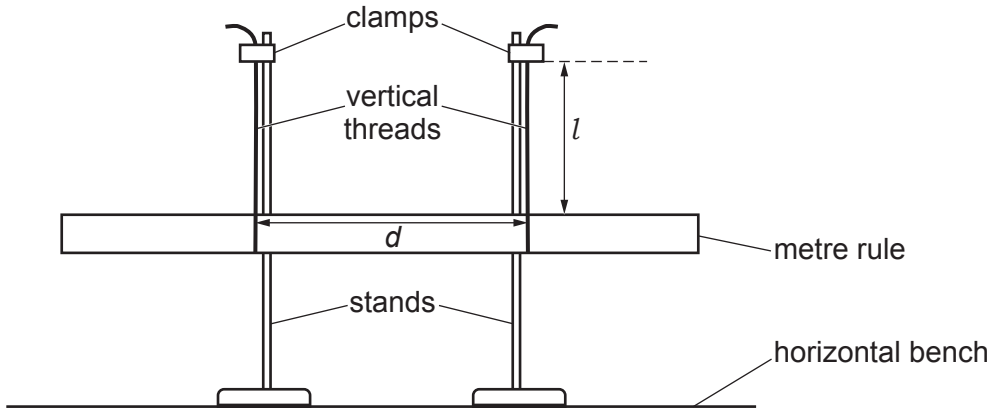

Fig. 1.1

(a) Ensure that the metre rule is horizontal. You may need to adjust the height of one of the clamps slightly.

Briefly describe how you check that the metre rule is horizontal. You may draw a diagram or add to Fig. 1.1 if it helps to explain your answer.

.....

.....

..... [1]

Do not change the length *l* of the threads during the experiment.

(b) Move one thread to the 40.0 cm mark on the metre rule and one thread to the 60.0 cm mark on the metre rule. The distance *d* between the threads is 20.0 cm.

Move the stands so that the threads remain vertical.

Hold each end of the metre rule. Twist the metre rule a small amount, as shown in Fig. 1.2, and then let it go so that it oscillates in a rotating motion.

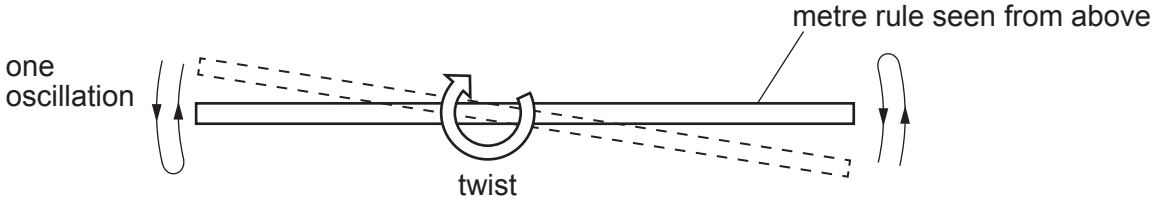

Fig. 1.2

© UCLES 2021

www.dynamicpapers.com

Measure, and record in Table 1.1, the time t for 5 complete oscillations of the metre rule.

Repeat this procedure for d values of 30.0 cm, 40.0 cm, 50.0 cm and 60.0 cm. For each value, the threads must be at equal distances either side of the 50.0 cm mark on the metre rule.

Table 1.1

d / cm	t / s	$\frac{1}{T} \Big/ \frac{1}{\text{s}}$
20.0		
30.0		
40.0		
50.0		
60.0		

[2]

(c) For each value of the distance d, calculate and record in Table 1.1, the value of $\frac{1}{T}$ where T is the time for 1 oscillation of the metre rule.
Use your values of time t from Table 1.1 and the equation $\frac{1}{T} = \frac{5}{t}$.

[1]

(d) Plot a graph of distance d / cm (y-axis) against $\frac{1}{T} \Big/ \frac{1}{\text{s}}$ (x-axis).

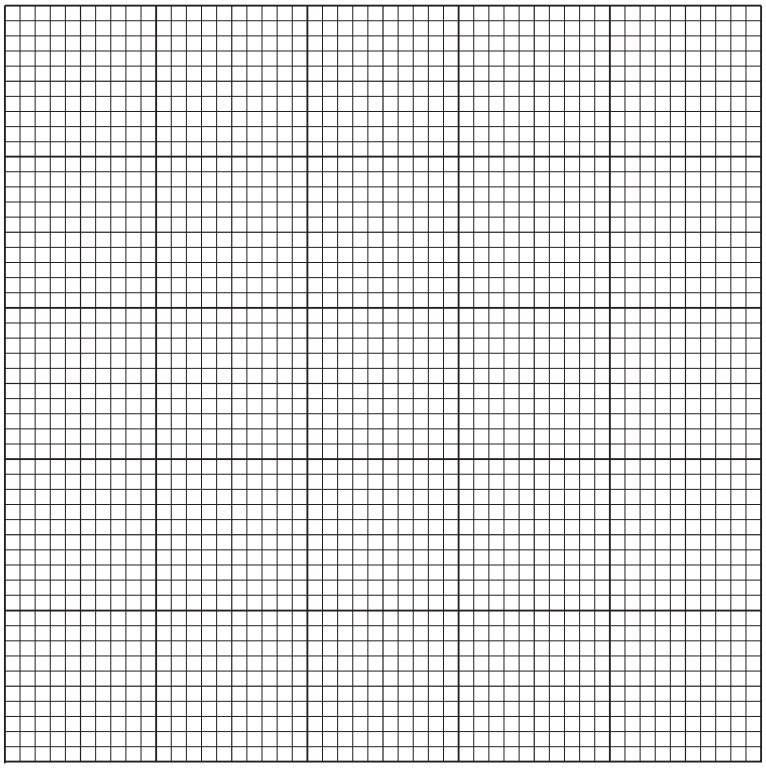

[4]

www.dynamicpapers.com

(e) Determine the gradient *G* of the graph. Show clearly on the graph how you obtained the necessary information.

G = ... [1]

(f) **(i)** Explain why it is more accurate to measure the time for 5 oscillations rather than for 1 oscillation.

.....

.....

..... [1]

(ii) Describe how the experiment could be improved to make the readings more reliable.

.....

.....

..... [1]

[Total: 11]

© UCLES 2021

www.dynamicpapers.com

2 In this experiment, you will investigate the cooling of hot water in two different cups.

Carry out the following instructions, referring to Fig. 2.1.

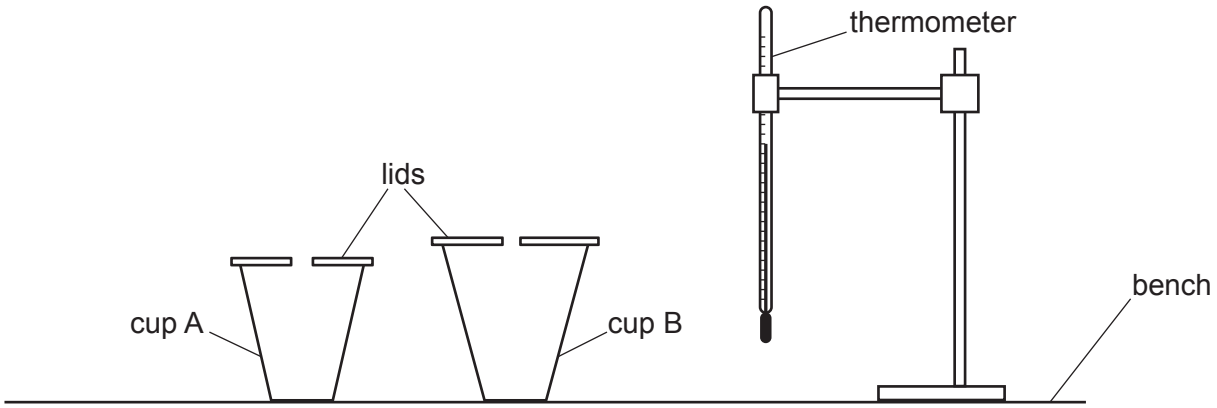

Fig. 2.1

(a) (i) Remove the lid from cup A.

Pour 75 cm^3 of hot water into cup A and replace the lid.

Place the thermometer in the water in cup A.

In the first row of Table 2.1, record the temperature θ of the water at time t = 0 and immediately start the stop-clock.

Record, in Table 2.1, the temperature θ of the water at times t = 30 s, 60 s, 90 s, 120 s, 150 s and 180 s.

[1]

(ii) Repeat the steps in **(a)(i)** for cup B. [2]

(b) **Table 2.1**

	cup A	cup B
t/	θ/	θ/
0		
30		
60		
90		
120		
150		
180		

Complete the headings in Table 2.1. [1]

© UCLES 2021

[Turn over

www.dynamicpapers.com

(c) Write a conclusion stating which cup, A or B, is the more effective in reducing the cooling rate of the hot water in this experiment.

Justify your answer by reference to your results.

.....

.....

.....

..... [2]

(d) **(i)** Calculate x_A, the average cooling rate for cup A over the whole experiment. Use your readings for cup A from Table 2.1 and the equation

$$x_A = \frac{\theta_0 - \theta_{180}}{T}$$

where $T = 180\,s$ and θ_0 and θ_{180} are the temperatures at time $t = 0$ and at time $t = 180\,s$. Include the unit for the cooling rate.

x_A = ... [2]

(ii) Suggest an additional experiment to show how the lid affects the cooling rate of cup A.

Explain how to use the additional results to show the effect.
You are **not** required to carry out this experiment.

additional experiment .....

.....

explanation .....

.....

.....
[2]

(e) A student wishes to compare the effect of the materials of the cups on cooling rates.

Suggest **one** variable that she should control to make this test fair.

.....

..... [1]

[Total: 11]

© UCLES 2021

www.dynamicpapers.com

BLANK PAGE

www.dynamicpapers.com

3 In this experiment, you will investigate a resistor and a lamp connected in series. The circuit has been set up for you with the voltmeter connected to measure the potential difference across the lamp.

Carry out the following instructions, referring to Fig. 3.1.

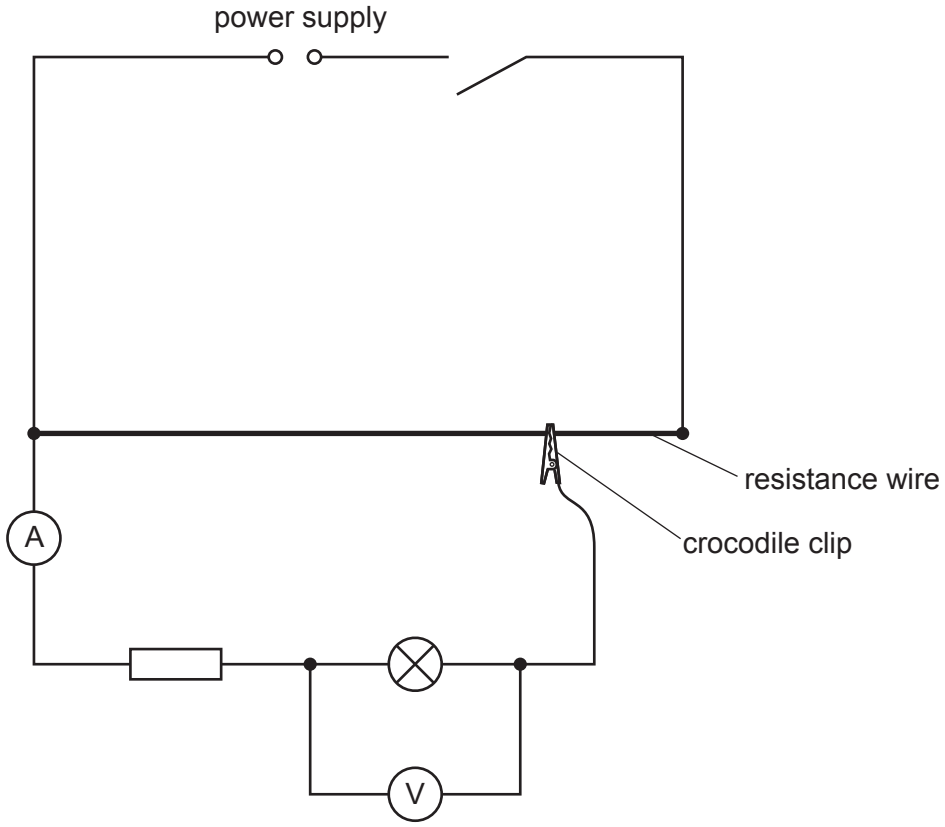

Fig. 3.1

(a) (i) Switch on.

Move the crocodile clip on the resistance wire so that the value of the potential difference V_L across the lamp is 2.0 V.

Measure, and record in Table 3.1, the value of the current I for the lamp and resistor in series.

Disconnect the voltmeter and re-connect it so that it measures the potential difference across the resistor.

Measure, and record in Table 3.1, the value of the potential difference V_R across the resistor.

Switch off.

Disconnect the voltmeter and re-connect it in its original position across the lamp.

[1]

© UCLES 2021

www.dynamicpapers.com

(ii) Repeat the steps in **(a)(i)** for V_L = 1.0 V and V_L = 0.5 V. [2]

Table 3.1

V_L / V	I / A	V_R / V	R_L / Ω	R_R / Ω
2.0				
1.0				
0.5				

(b) Calculate, and record in Table 3.1, the resistance of the lamp R_L for each value of V_L.

Use your values of V_L and I from Table 3.1 and the equation $R_L = \frac{V_L}{I}$.

Calculate, and record in Table 3.1, the resistance of the resistor R_R for each value of V_L.

Use your values of V_R and I from Table 3.1 and the equation $R_R = \frac{V_R}{I}$.

[3]

(c) A student suggests that R_R should be constant.

State whether your results support this suggestion.
Justify your statement by reference to values from Table 3.1.

statement .....

.....

justification .....

.....

.....

[2]

(d) A student wishes to determine the resistance of the lamp R_L when the potential difference across the lamp V_L = 0.0 V.

Describe how the experiment can be extended to do this with the help of a suitable graph.
You are **not** required to carry out this additional experiment.

.....

.....

.....

..... [2]

www.dynamicpapers.com

(e) It is possible to use a variable resistor instead of a resistance wire to change the potential difference across the lamp.

Complete the circuit in Fig. 3.2 to show a variable resistor used for this purpose.

You are **not** required to carry out this experiment.

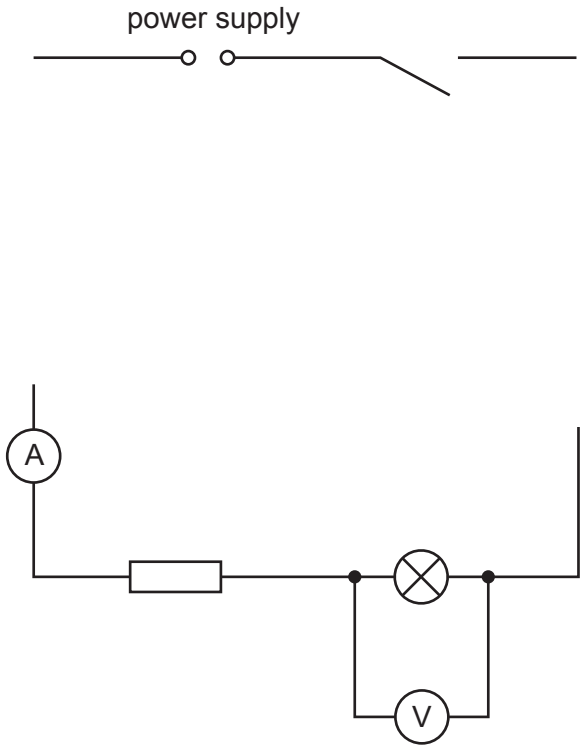

Fig. 3.2 [1]

[Total: 11]

© UCLES 2021

www.dynamicpapers.com

4 A student investigates the motion of a ball rolling down a slope.

Plan an experiment which enables him to investigate how **one** factor affects the average speed of the ball.

Average speed can be calculated using the equation:

$$\text{average speed} = \frac{\text{distance travelled}}{\text{time taken}}$$

You are **not** required to carry out the experiment.

The apparatus available includes:

balls of various sizes and materials
a board which can act as a slope
blocks to support one end of the board.

In your plan, you should:

- state a factor which can be measured
- list any additional apparatus needed
- explain briefly how to carry out the experiment including exactly which measurements are to be taken
- state the key variables to be kept constant
- draw a table, or tables, with column headings, to show how to display the readings (you are **not** required to enter any readings in the table)
- explain how to use the readings to reach a conclusion.

You may draw a diagram if it helps to explain your plan.

© UCLES 2021

[Turn over

www.dynamicpapers.com

.....

.....

.....