www.dynamicpapers.com

Cambridge Assessment International Education

Cambridge O Level

PHYSICS **5054/11**

Paper 1 Multiple Choice **May/June 2024**

1 hour

You must answer on the multiple choice answer sheet.

You will need: Multiple choice answer sheet
Soft clean eraser
Soft pencil (type B or HB is recommended)

INSTRUCTIONS

- There are **forty** questions on this paper. Answer **all** questions.
- For each question there are four possible answers **A**, **B**, **C** and **D**. Choose the **one** you consider correct and record your choice in soft pencil on the multiple choice answer sheet.
- Follow the instructions on the multiple choice answer sheet.
- Write in soft pencil.
- Write your name, centre number and candidate number on the multiple choice answer sheet in the spaces provided unless this has been done for you.
- Do **not** use correction fluid.
- Do **not** write on any bar codes.
- You may use a calculator.
- Take the weight of 1.0 kg to be 9.8 N (acceleration of free fall = 9.8 m / s^2).

INFORMATION

- The total mark for this paper is 40.
- Each correct answer will score one mark.
- Any rough working should be done on this question paper.

This document has **16** pages.

IB24 06_5054_11/2RP
© UCLES 2024

www.dynamicpapers.com

1 A measuring cylinder containing water is placed on a top-pan balance. An object is placed into the measuring cylinder.

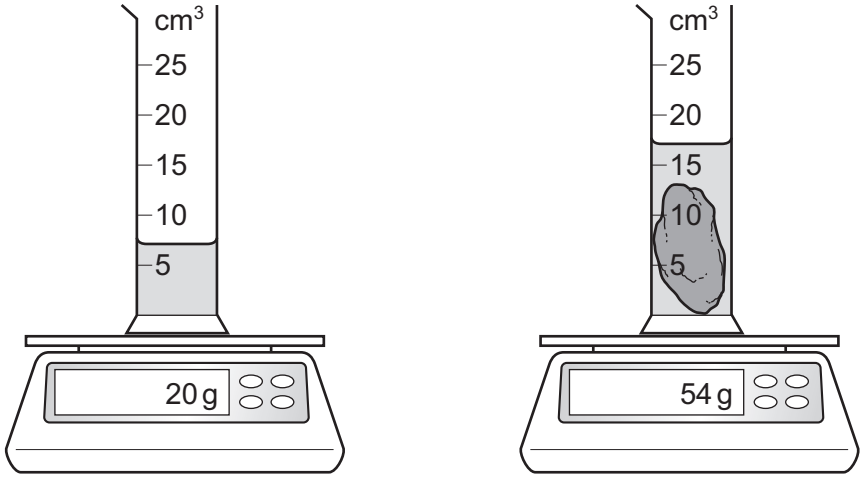

What is the mass and what is the volume of the object?

	mass / g	volume / cm^3
A	10	7
B	10	34
C	34	10
D	34	17

2 Which quantity is a vector?

A distance

B force

C mass

D speed

www.dynamicpapers.com

3 The table shows the distance travelled by a car in each 2 s time interval during a 12 s period of its journey.

time interval / s	0–2	2–4	4–6	6–8	8–10	10–12
distance travelled in time interval / m	10	10	11	13	16	23

Which statement describes the motion of the car?

A moving with constant speed from 0–4 s, followed by non-uniform acceleration

B moving with constant speed from 0–4 s, then uniform acceleration

C at rest from 0–4 s, then non-uniform acceleration

D at rest from 0–4 s, then uniform acceleration

4 Two cubes, X and Y, have the same mass, but the length of a side of X is twice that of Y.

What is the value of the ratio $\frac{\text{density of X}}{\text{density of Y}}$?

A 0.125 **B** 1.0 **C** 4.0 **D** 8.0

5 An object slides down a frictionless slope as shown.

As the object presses on the surface, the surface pushes back on the object.

In which direction does the surface push back on the object?

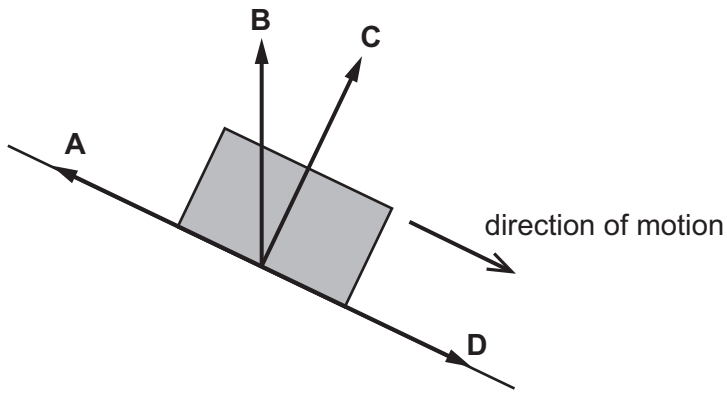

www.dynamicpapers.com

6 A car, travelling on a straight road, brakes and comes to a stop.

Which row gives the expression for calculating the thinking distance and gives a variable that affects thinking distance?

	expression for calculating thinking distance	variable that affects thinking distance
A	braking distance + stopping distance	load carried
B	braking distance + stopping distance	speed of car
C	stopping distance – braking distance	load carried
D	stopping distance – braking distance	speed of car

7 An unstretched spring of length 15.0 cm stretches by 4.0 cm when a mass of weight 6.0 N is suspended from it. The spring does not exceed the limit of proportionality.

What is the total length of the spring when the weight of the suspended mass is 3.0 N?

A 2.0 cm **B** 7.5 cm **C** 9.5 cm **D** 17.0 cm

8 Which statements describing the moment of a force about a pivot are correct?

1 The moment of a force is a measure of the turning effect of the force.

2 The moment of a force is equal to the force × perpendicular distance from the pivot.

3 The moment of a force is equal to the force × pressure on the pivot.

A 1 and 2 **B** 1 and 3 **C** 2 only **D** 3 only

© UCLES 2024

www.dynamicpapers.com

9 Four objects have identical shapes but different distributions of mass.

The centre of gravity of each object is shown by the dot marked G.

Which object is the most stable?

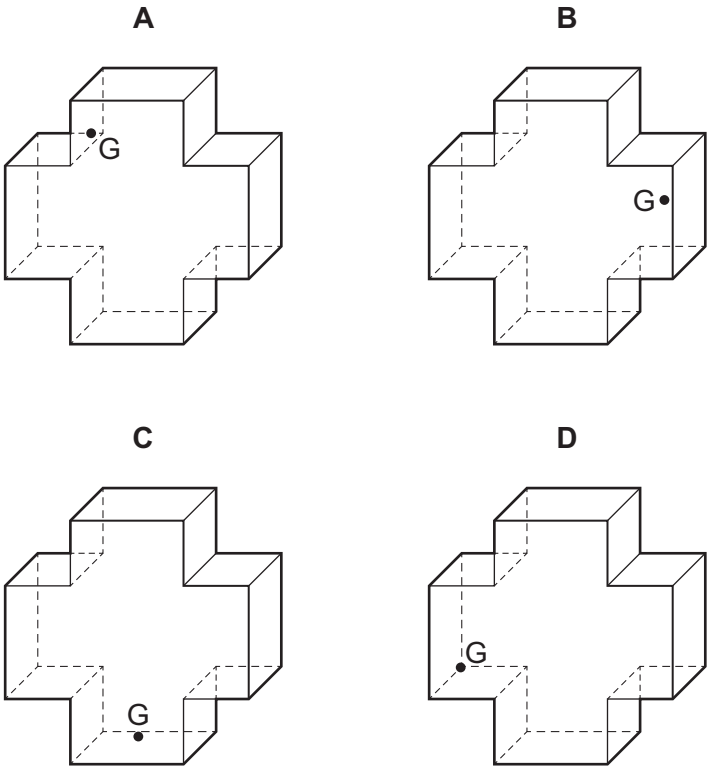

10 An object of mass 5.0 kg is pushed up a slope at a steady speed of 2.0 m / s.

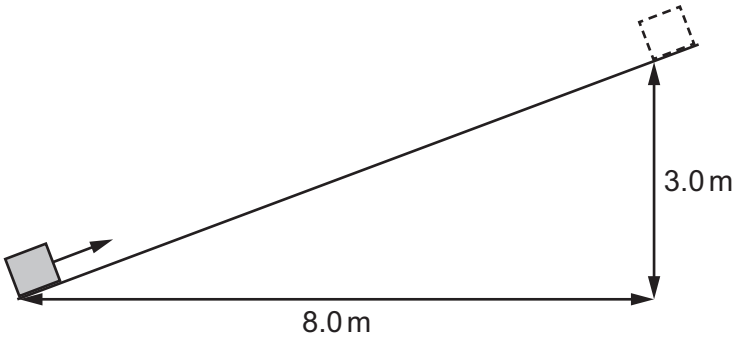

Which calculation gives the change in gravitational potential energy from the bottom to the top?

A $0.50 \times 5.0 \times 2.0$

B $5.0 \times 9.8 \times 3.0$

C $0.50 \times 5.0 \times 2.0^2$

D $5.0 \times 9.8 \times 8.0$

www.dynamicpapers.com

11 A student of mass 60 kg climbs some steps. He travels a horizontal distance of 2.0 m and a vertical distance of 1.5 m.

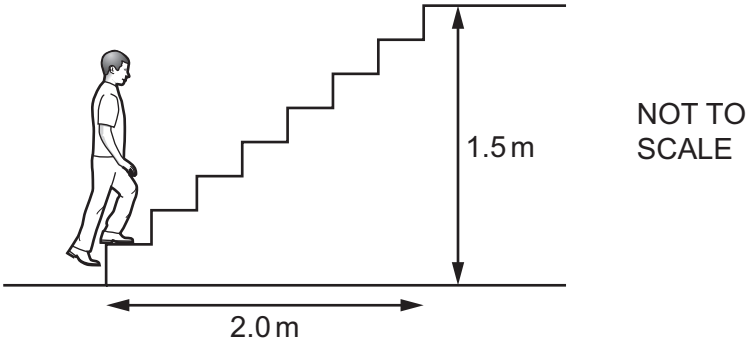

What is the work done against the force of gravity?

A 88 J **B** 118 J **C** 880 J **D** 1200 J

12 Which method of producing electricity does **not** involve a turbine?

A hydroelectric power station

B nuclear power station

C solar cells

D wind generator

13 The input power to a lamp is 6.0 W. The lamp wastes 2.7 J of energy in 3.0 s.

What is the efficiency of the lamp?

A 0.15 **B** 0.45 **C** 0.55 **D** 0.85

14 A camera is taken under water and left at a depth of 8.0 m.

atmospheric pressure = 100 000 Pa

density of water = 1000 kg / m^3

What is the total pressure acting on the camera?

A 22 000 Pa **B** 78 000 Pa **C** 110 000 Pa **D** 178 000 Pa

15 In which example are the particles in fixed positions?

A ice in an ice cube

B water in a lake

C air in an air bubble

D water vapour in the atmosphere

www.dynamicpapers.com

16 A gas expands slowly and its temperature remains constant.

What happens to the gas particles?

A They move further apart and their average speed decreases.

B They move further apart and their average speed increases.

C They move further apart and their average speed remains unchanged.

D They stay the same distance apart and their average speed decreases.

17 The air in each of four syringes is slowly compressed so that the temperature of the air stays constant. The volumes before and after compression for each syringe are given in the table.

The air in all four syringes is initially at the same pressure.

Which syringe shows the smallest pressure change?

	volume before compression / cm^3	volume after compression / cm^3
A	50	10
B	100	50
C	400	25
D	400	100

18 The temperature of a substance is measured with a liquid-in-glass thermometer.

Which physical property changes so that the temperature can be measured?

A length of the thermometer

B mass of the liquid

C specific heat capacity of the liquid

D volume of the liquid

19 Boiling and evaporation are different processes.

Which statement is correct?

A Boiling only occurs at the surface of a liquid.

B Evaporation only occurs when the temperature of the liquid is high enough.

C Evaporation does not change the temperature of a liquid.

D When a boiling liquid is heated its temperature remains constant.

www.dynamicpapers.com

20 A glass beaker contains water. When the centre of the base of the beaker is heated, a convection current is set up.

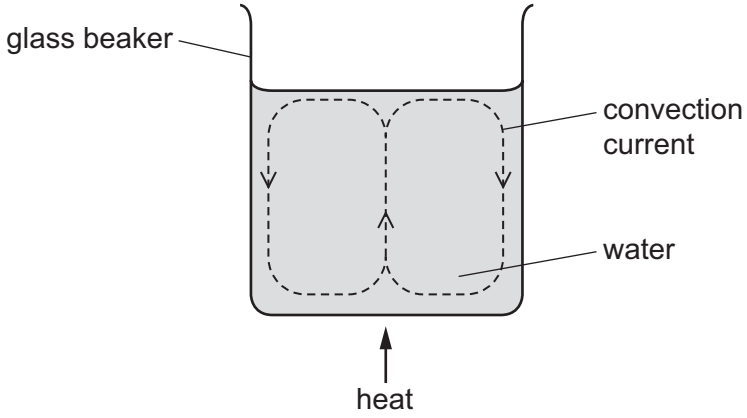

Which statement explains this?

A The evaporation of water causes water molecules to rise to the surface.

B The expansion of water molecules causes them to rise to the surface.

C The water above the heat source rises because it becomes less dense.

D The water at the side falls because it becomes less dense.

21 A hot meal is supplied in a container made of shiny metal foil.

Why does the container help to keep the food hot?

A The container traps air which increases convection.

B The foil is a poor thermal conductor.

C Shiny metal foil is a good absorber of infrared radiation.

D Shiny metal foil is a poor emitter of infrared radiation.

22 Which quantity is defined as the number of wavelengths passing a point per second?

A amplitude

B frequency

C speed

D wavelength

© UCLES 2024

www.dynamicpapers.com

23 A plane mirror forms the image of an object.

What are characteristics of the image formed?

	size	type
A	same as object	real
B	same as object	virtual
C	smaller than object	real
D	smaller than object	virtual

24 A ray of light strikes the surface of a glass block at an angle of incidence of 45°.

The refractive index of the glass is 1.8.

What is the angle of refraction inside the block?

A 23° **B** 25° **C** 45° **D** 81°

25 Which diagram shows rays of light passing through a converging lens?

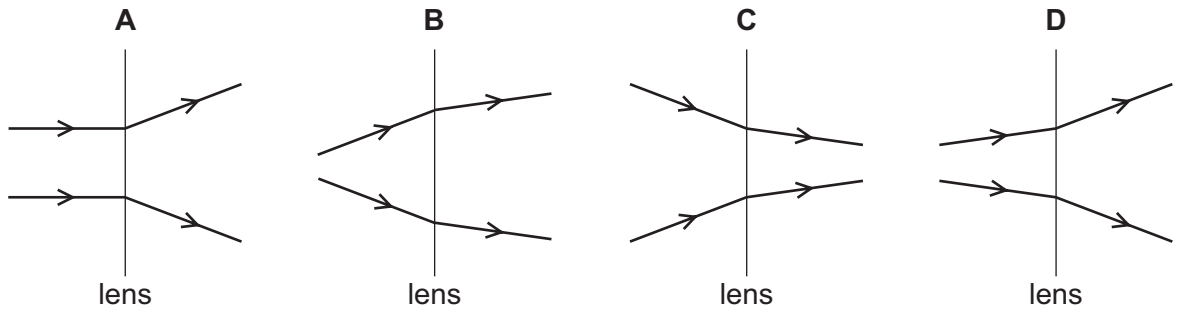

www.dynamicpapers.com

26 A beam of white light is incident on a glass prism.

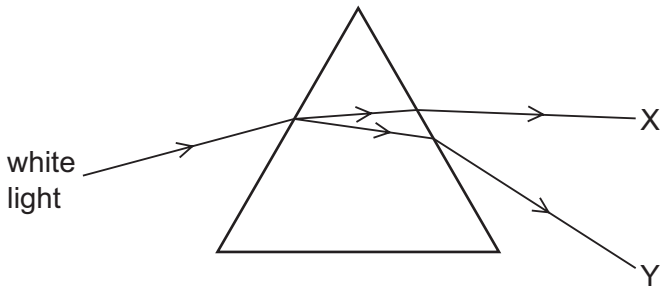

X and Y are the two ends of the visible spectrum.

Which statement is correct?

A All the light travels at the same speed in the prism.

B The light at X has a lower frequency than the light at Y.

C The light at X refracts more as it leaves the prism than the light at Y.

D The white light refracts away from the normal as it enters the prism.

27 Which components of the electromagnetic spectrum are used to communicate from a remote controller to a television set and from the Earth to a satellite?

	remote controller to TV set	the Earth to a satellite
A	infrared	microwave
B	infrared	ultraviolet
C	light	microwave
D	light	ultraviolet

www.dynamicpapers.com

28 A student claps his hands in front of a wall and hears the echoes. He claps at the same moment as he hears the echo of the previous clap.

Another student starts a stop-watch on the first clap and stops it on the eleventh clap. The reading on the stop-watch is 9.4 s and the speed of sound is 320 m / s.

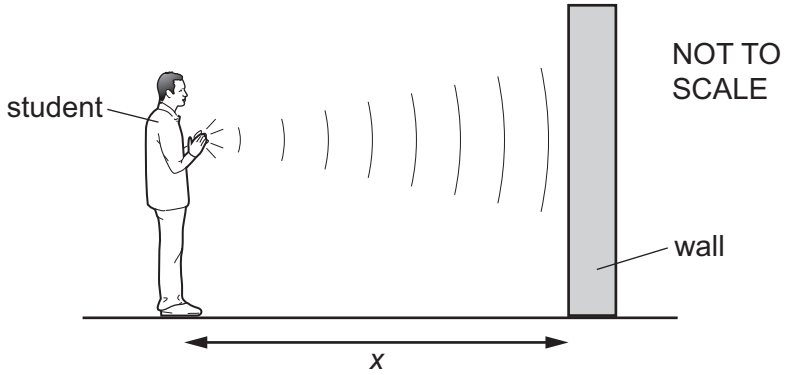

What is the distance *x* between the student and the wall?

A 140 m **B** 150 m **C** 270 m **D** 300 m

29 A compass is placed close to a strong bar magnet and pivots to the position shown.

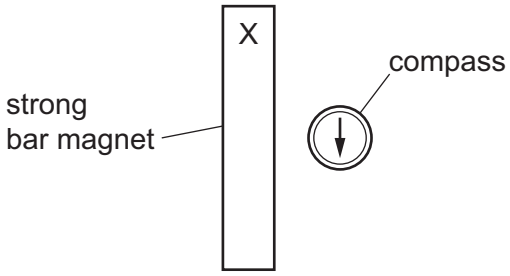

Which type of magnet is a compass needle and what is pole X?

A The needle is an induced magnet and X is a north magnetic pole.

B The needle is an induced magnet and X is a south magnetic pole.

C The needle is a permanent magnet and X is a north magnetic pole.

D The needle is a permanent magnet and X is a south magnetic pole.

www.dynamicpapers.com

30 Plastic and wool are insulating materials.

Samples of plastic and wool are rubbed together. This causes a transfer of electrons.

Which row shows the direction of electron transfer and the final charge on both materials?

	plastic	wool	final charge on plastic	final charge on wool
A	gains electrons	loses electrons	neutral	positive
B	gains electrons	loses electrons	negative	positive
C	loses electrons	gains electrons	negative	positive
D	loses electrons	gains electrons	positive	neutral

31 Which circuit contains a heater and a fuse?

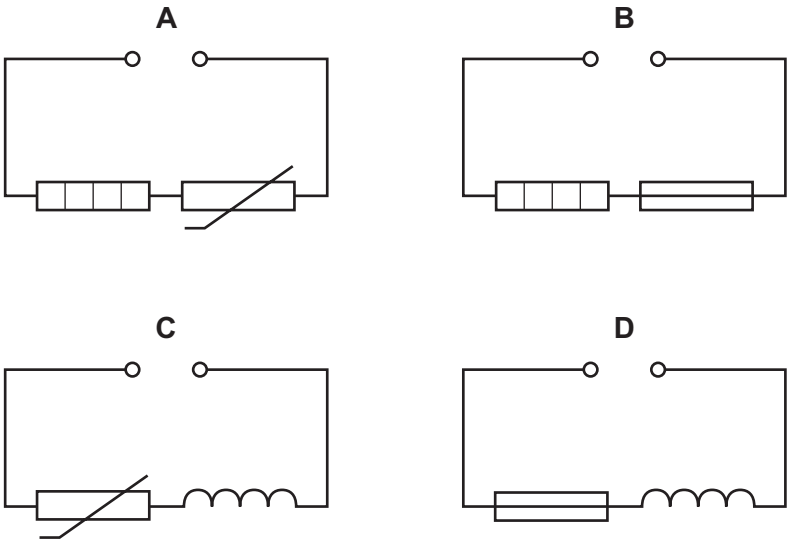

www.dynamicpapers.com

32 A light-dependent resistor (LDR) is to be used as an input sensor for an intruder alarm circuit. When there is no light on the LDR, the lamp switches on.

The resistance of the fixed resistor is less than that of the lamp.

Which diagram shows the circuit?

A

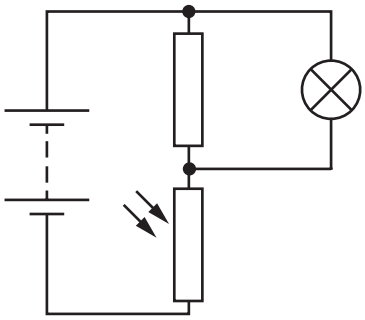

B

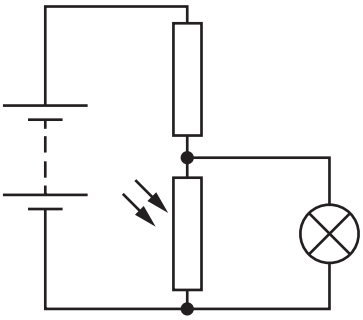

C

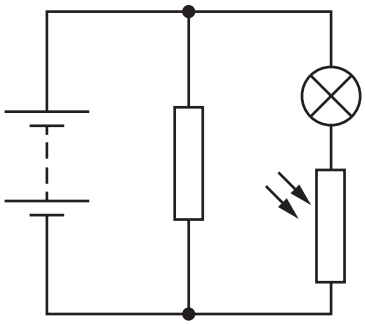

D

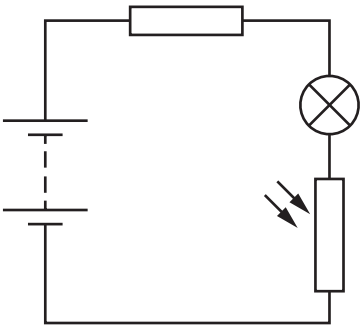

33 A potential difference of 4.0 V produces a current of 3.0 A in a resistor.

How much energy is transferred to thermal energy during 10 s?

A 12 J **B** 30 J **C** 40 J **D** 120 J

www.dynamicpapers.com

34 The diagram shows a generator.

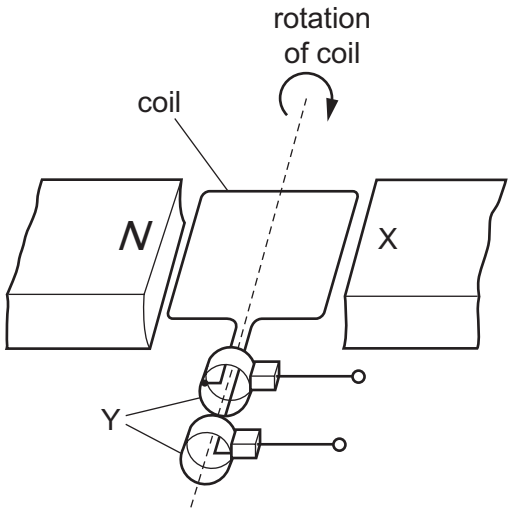

What are X and Y?

	X	Y
A	N pole	split-ring commutator
B	N pole	slip rings
C	S pole	split-ring commutator
D	S pole	slip rings

35 The diagram shows a loudspeaker that is producing a sound.

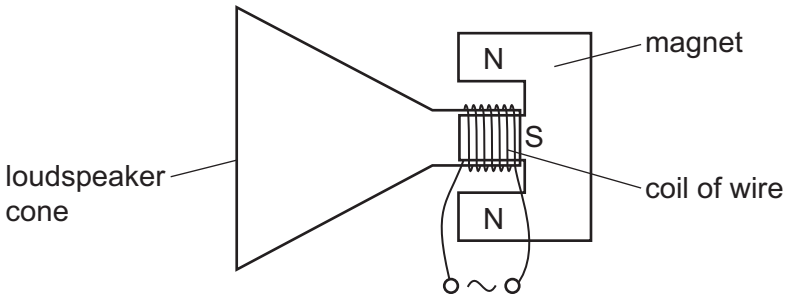

A student writes four sentences about the loudspeaker.

1 There is a direct current in the coil of wire.

2 The current in the coil produces a changing magnetic field.

3 A force is produced on the coil of wire attached to the cone.

4 The cone spins around due to the force.

Which sentences are correct?

A 1 and 2 **B** 1 and 4 **C** 2 and 3 **D** 3 and 4

www.dynamicpapers.com

36 A step-down transformer changes 240 V a.c. to 12 V a.c. There are 600 turns on the primary coil.

How many turns are on the secondary coil?

A 20 **B** 30 **C** 600 **D** 12 000

37 Alpha particles are directed at a thin gold foil.

Only a very small proportion of the alpha particles are deflected through very large angles.

Which fact about the nuclei of the gold atoms is **not** a conclusion of this experiment?

A They are surrounded by mostly empty space.

B They are very small.

C They contain most of the mass of the atom.

D They contain protons and neutrons.

38 A radioactive source emitting only gamma radiation is placed in front of a radiation detector which measures the count rate.

What must cause the count rate to increase?

A a thick sheet of lead placed between the source and the detector

B a strong magnetic field placed between the source and the detector

C the radioactive source moved closer to the detector

D the detector moved further away from the radioactive source

39 Nuclear fusion is one source of energy.

What is nuclear fusion?

A the decay of a radioactive nucleus

B the joining together of two nuclei to make a larger nucleus

C the melting of an unstable nucleus

D the splitting of a nucleus into two lighter nuclei

www.dynamicpapers.com

40 Which statement is correct?

A The orbital speed of the Earth around the Sun is:

$$\frac{2\pi \times \text{average diameter of the orbit}}{\text{orbital period}}.$$

B The orbit of the Earth around the Sun is an ellipse.

C The Moon takes approximately one month to orbit the Sun.

D Light from the Sun takes 5.0 minutes to reach the Earth.

Permission to reproduce items where third-party owned material protected by copyright is included has been sought and cleared where possible. Every reasonable effort has been made by the publisher (UCLES) to trace copyright holders, but if any items requiring clearance have unwittingly been included, the publisher will be pleased to make amends at the earliest possible opportunity.

To avoid the issue of disclosure of answer-related information to candidates, all copyright acknowledgements are reproduced online in the Cambridge Assessment International Education Copyright Acknowledgements Booklet. This is produced for each series of examinations and is freely available to download at www.cambridgeinternational.org after the live examination series.

Cambridge Assessment International Education is part of Cambridge Assessment. Cambridge Assessment is the brand name of the University of Cambridge Local Examinations Syndicate (UCLES), which is a department of the University of Cambridge.

© UCLES 2024