www.dynamicpapers.com

Cambridge Assessment International Education

Cambridge IGCSE™

CANDIDATE NAME	

CENTRE NUMBER						CANDIDATE NUMBER				

0836156 07

BIOLOGY **0610/41**

Paper 4 Theory (Extended) **May/June 2020**

1 hour 15 minutes

You must answer on the question paper.

No additional materials are needed.

INSTRUCTIONS

- Answer **all** questions.
- Use a black or dark blue pen. You may use an HB pencil for any diagrams or graphs.
- Write your name, centre number and candidate number in the boxes at the top of the page.
- Write your answer to each question in the space provided.
- Do **not** use an erasable pen or correction fluid.
- Do **not** write on any bar codes.
- You may use a calculator.
- You should show all your working and use appropriate units.

INFORMATION

- The total mark for this paper is 80.
- The number of marks for each question or part question is shown in brackets [ ].

This document has **20** pages. Blank pages are indicated.

DC (ST/CT) 180481/3
© UCLES 2020

www.dynamicpapers.com

1 The gas exchange system is one of the organ systems of the human body.

Fig. 1.1 shows parts of the gas exchange system during breathing in and breathing out.

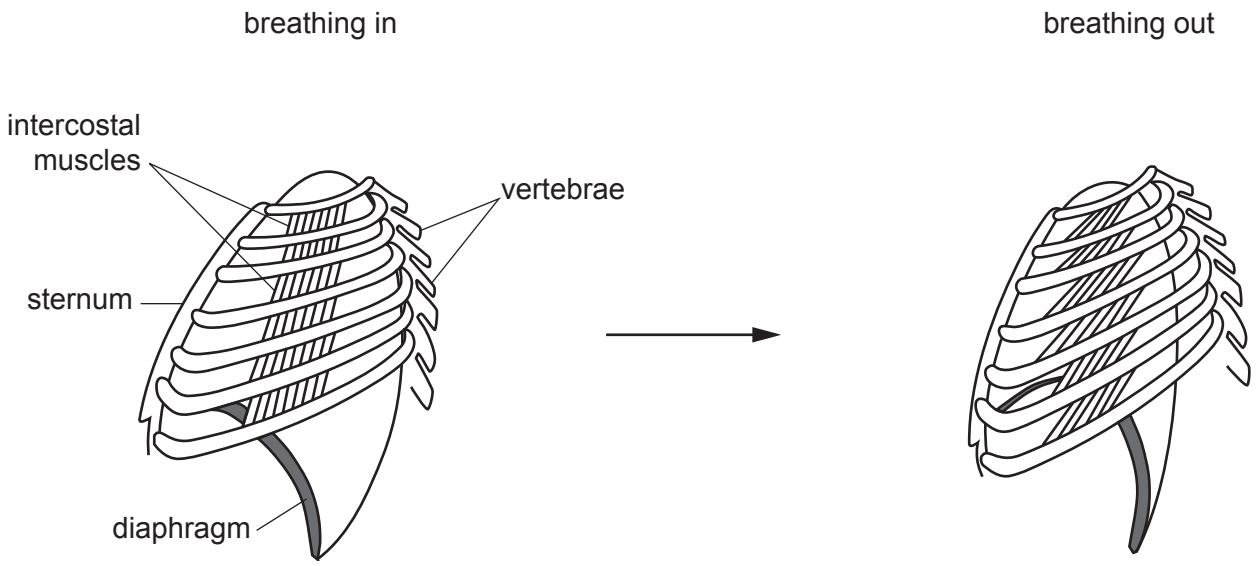

Fig. 1.1

(a) Complete Table 1.1 to show:

- the functions of the diaphragm and the intercostal muscles during breathing in and breathing out
- the pressure changes in the thorax.

Use these words:

contract
relax
increases
decreases.

Table 1.1

	diaphragm	intercostal muscles		pressure change in the thorax
		internal	external	
breathing in				
breathing out				

[4]

www.dynamicpapers.com

Fig. 1.2 shows part of the gas exchange surface of a human.

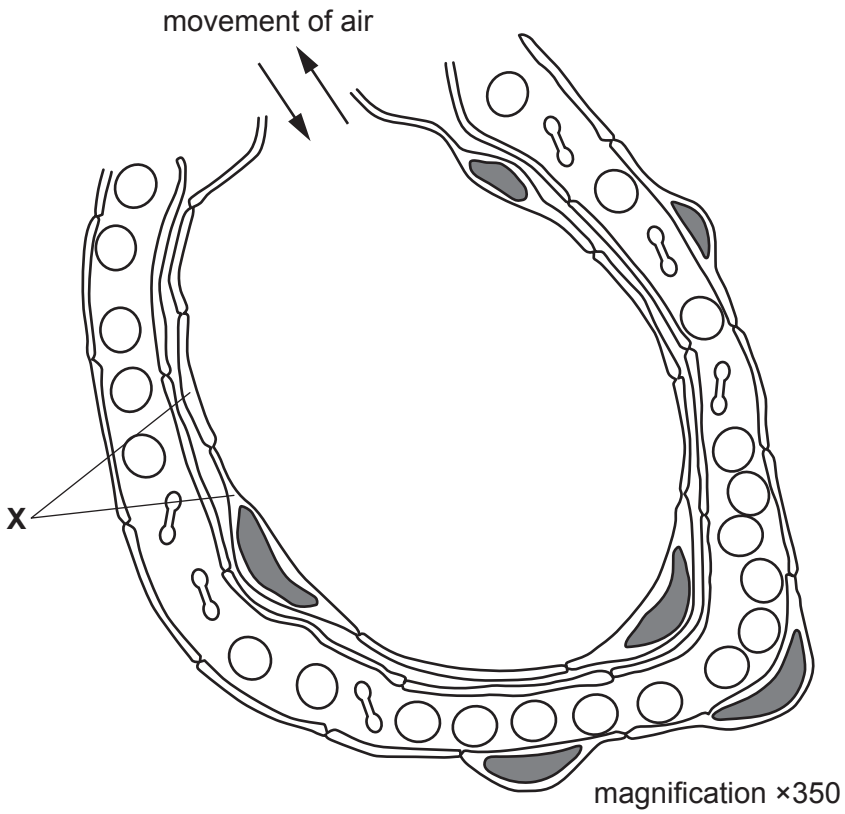

Fig. 1.2

(b) State **two** features of the gas exchange surface that are **visible** in Fig. 1.2.

1 .....

2 .....
[2]

(c) The cells labelled **X** on Fig. 1.2 form a tissue.

(i) Define the term *tissue*.

.....

.....

.....

.....

..... [2]

www.dynamicpapers.com

(ii) Cartilage is another tissue found in the gas exchange system.

State the functions of cartilage in the gas exchange system.

.....

.....

.....

.....

..... [2]

[Total: 10]

2 Biological washing powders contain enzymes that break down food stains.

(a) Complete Table 2.1 by naming the enzymes that break down three substances in food stains and by stating the product or products.

Table 2.1

substance	enzyme	product(s)
starch		
fat		
protein		

[3]

Some students compared how effective biological and non-biological washing powders are at removing stains at temperatures between 10 °C and 60 °C.

- Pieces of stained cloth were washed using two different washing powders.
- The degree of stain removal was measured by using a light meter to record the percentage of light reflected from the cloth.
- A light meter gave a value of 100% when the cloth was completely clean.
- Any stain left on the cloth reduced the percentage of light reflected.

www.dynamicpapers.com

The results of the students' investigation are shown in Fig. 2.1.

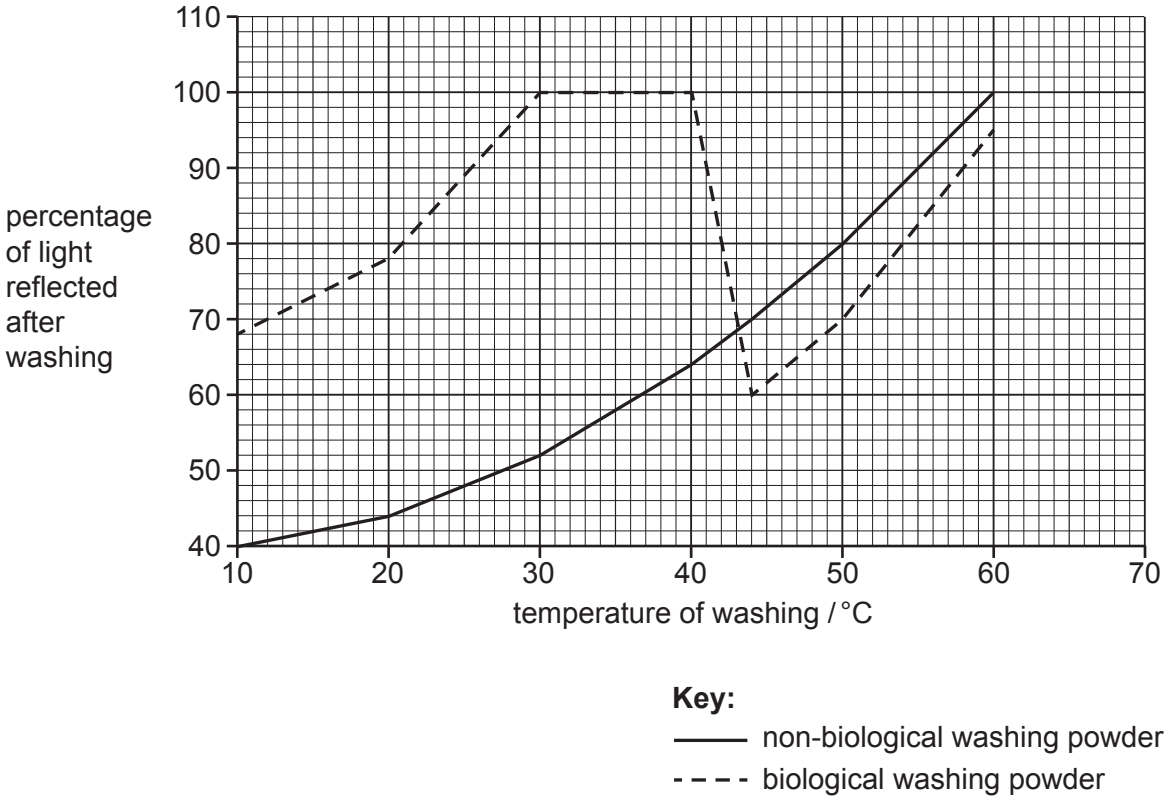

Fig. 2.1

(b) Compare the effectiveness of the two washing powders at removing stains.

Use the information in Fig. 2.1 in your answer.

.....

.....

.....

.....

.....

.....

.....

.....

..... [4]

www.dynamicpapers.com

(c) The students suggested that the enzymes in the biological washing powder were denatured at high temperatures.

Explain why enzyme molecules do not function when they are denatured.

.....

.....

.....

.....

..... [2]

(d) Forensic scientists often try to find DNA on items of stained clothing. The DNA can be used to identify individual people.

Suggest why DNA can be used to identify individual people.

.....

.....

.....

.....

..... [2]

[Total: 11]

3 **(a)** Dialysis tubing is an artificial membrane, which is similar to the lining of the intestine.

A student investigated the diffusion of glucose through dialysis tubing by using the apparatus shown in Fig. 3.1.

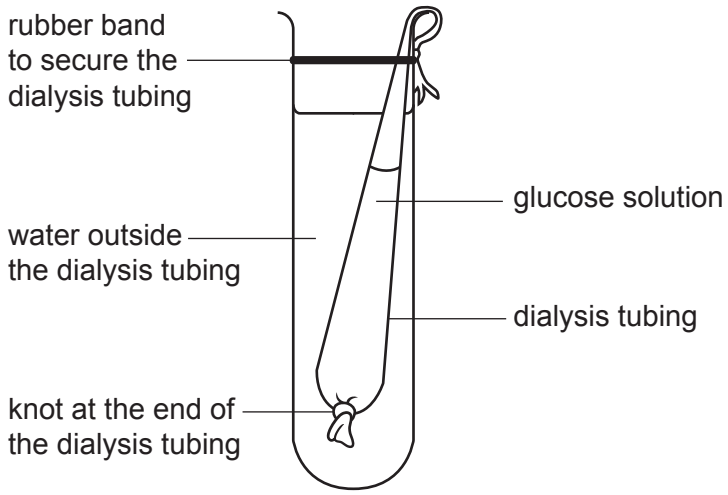

Fig. 3.1

www.dynamicpapers.com

The student took samples of the water outside the dialysis tubing at 5 minute intervals and tested the samples with Benedict's solution.

The results are shown in Table 3.1.

Table 3.1

time / minutes	results of the Benedict's tests on the water outside the dialysis tubing
0	blue
5	green
10	yellow
15	red

(i) Describe and explain the results shown in Table 3.1.

.....

.....

.....

.....

.....

.....

..... [3]

(ii) The student repeated the investigation with a higher concentration of glucose in the dialysis tubing.

Predict the results that the student would observe.

.....

.....

..... [1]

www.dynamicpapers.com

(b) Fig. 3.2 shows a drawing of a cell from the lining of the small intestine. The lumen is the space inside the intestine where food is digested.

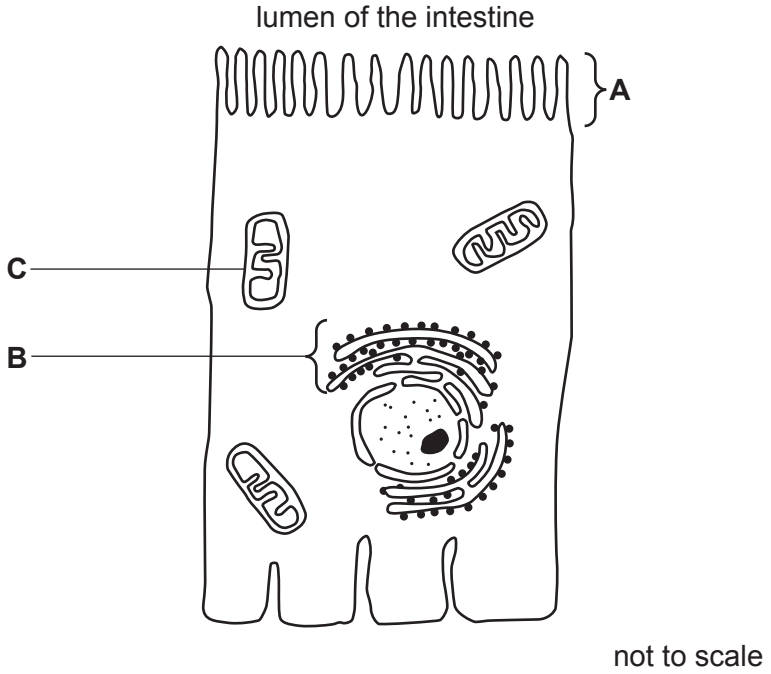

Fig. 3.2

State the names of the **three** labelled structures in Fig. 3.2 **and** describe the role of each structure in the intestinal cell.

.....

.....

.....

.....

.....

.....

.....

.....

.....

.....

.....

.....

..... [6]

www.dynamicpapers.com

(c) The cholera bacterium can survive in the small intestine and the large intestine. The bacterium releases a toxin that interacts with receptors on the surface of cells.

Fig. 3.3 shows the effect of the toxin. The arrows indicate the direction of movement.

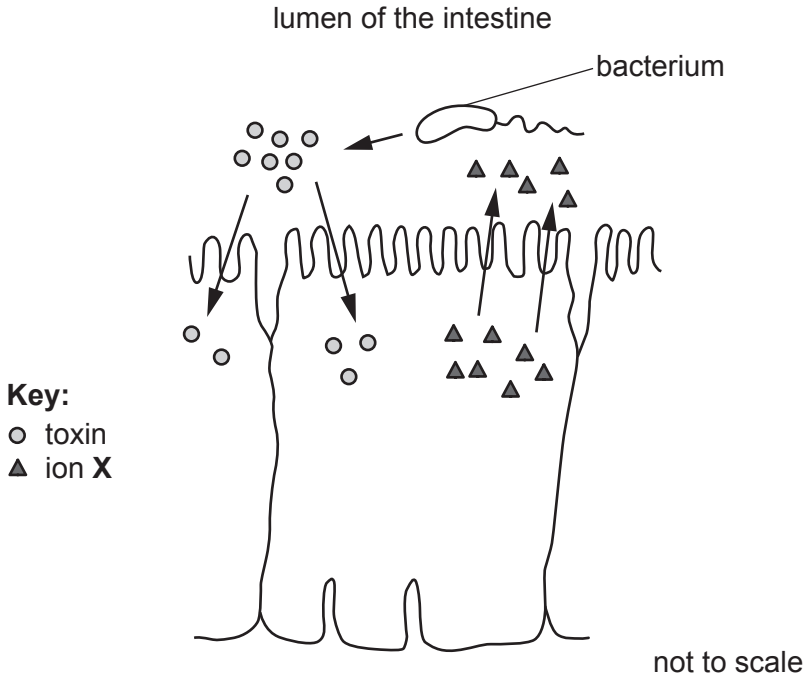

Fig. 3.3

The toxin stimulates the secretion of ion **X** out of the intestinal cell.

(i) State the name of ion **X**.

..... [1]

(ii) Describe the effects on the body of the secretion of ion **X** into the lumen of the intestine.

.....

.....

.....

.....

.....

.....

.....

.....

..... [4]

[Total: 15]

www.dynamicpapers.com

BLANK PAGE

www.dynamicpapers.com

4 Johnson grass, *Sorghum halepense*, is wind-pollinated.

(a) Fig. 4.1 shows some Johnson grass flowers.

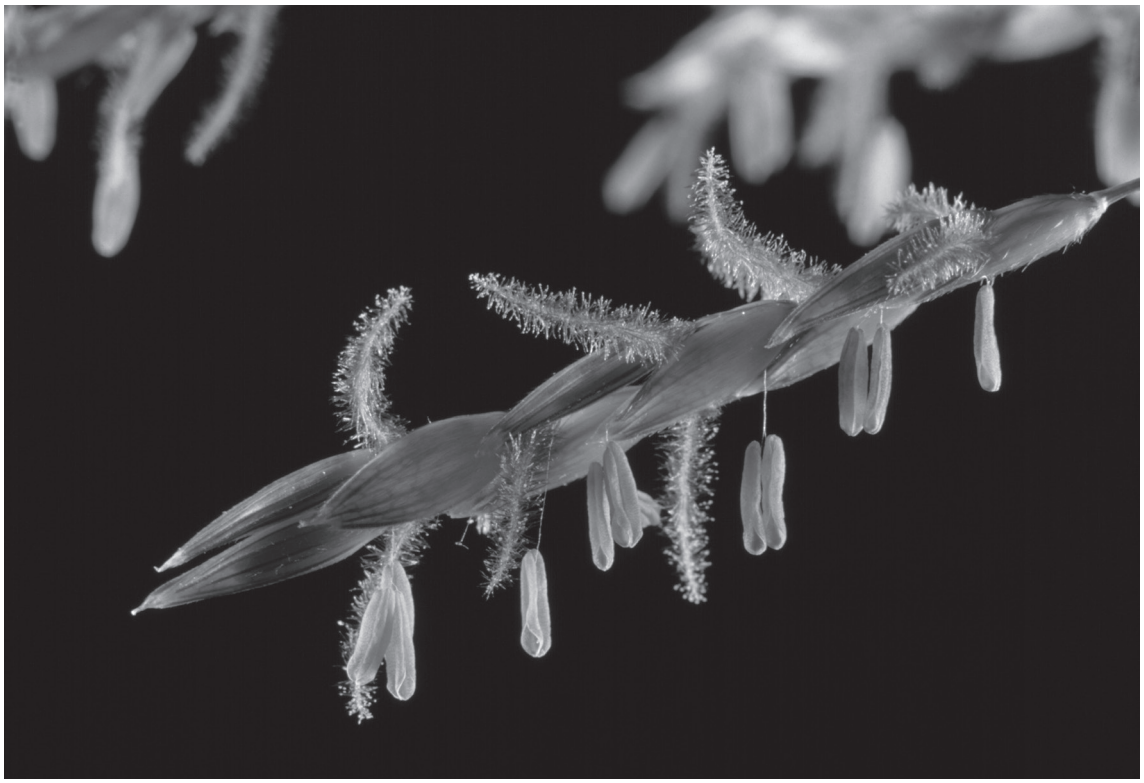

Fig. 4.1

(i) State the genus of Johnson grass.

..... [1]

(ii) Describe **two** features **visible in Fig. 4.1** that show that Johnson grass flowers are adapted for wind-pollination.

1 .....

.....

2 .....

.....

[2]

www.dynamicpapers.com

(b) Fig. 4.2 shows a section through a carpel shortly after pollination.

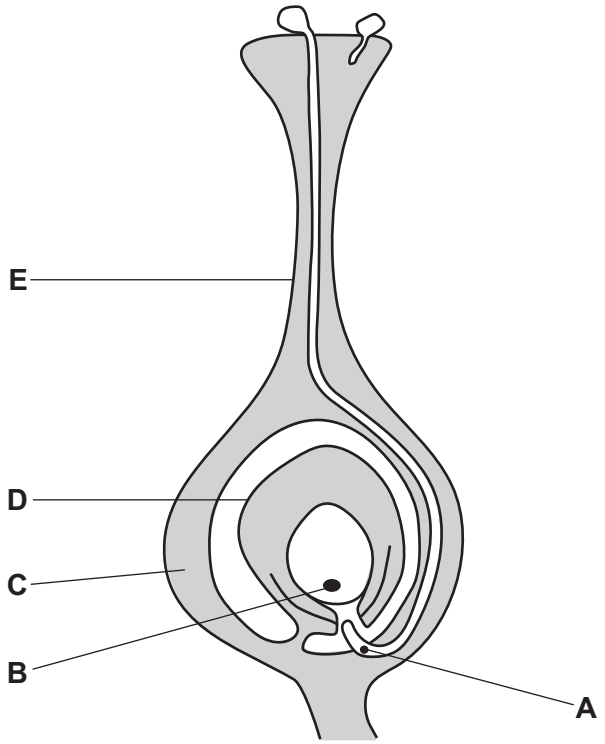

Fig. 4.2

(i) State the names of the parts of the carpel labelled **C**, **D** and **E**.

C .....

D .....

E .....

[3]

(ii) Complete the sentences:

Pollen grains are formed in anthers. During their formation the number of chromosomes in the nuclei is halved by the process of ..... . This means the male nucleus **A** in the pollen tube is described as a ..... nucleus. When nucleus **A** ..... with nucleus **B**, the chromosome number doubles to form a ..... nucleus. The name of this process is ..... . Then the ..... divides by the process of ..... to form an embryo.

[7]

© UCLES 2020

www.dynamicpapers.com

(c) Discuss the advantages of sexual reproduction to a wild population of flowering plants such as Johnson grass.

.....

.....

.....

.....

.....

.....

.....

.....

.....

.....

..... [5]

(d) Sexual reproduction requires energy.

State **three** uses of energy in organisms **other than in reproduction**.

1 .....

2 .....

3 .....
[3]

[Total: 21]

www.dynamicpapers.com

5 Ciliates are classified in the kingdom Protoctist. Bacteria are classified in the kingdom Prokaryote.

(a) State **two structural** features that distinguish the cells of a protoctist from a prokaryote.

1 .....

.....

2 .....

.....
[2]

(b) Fig. 5.1 shows five species of ciliate that are found in sewage treatment works.

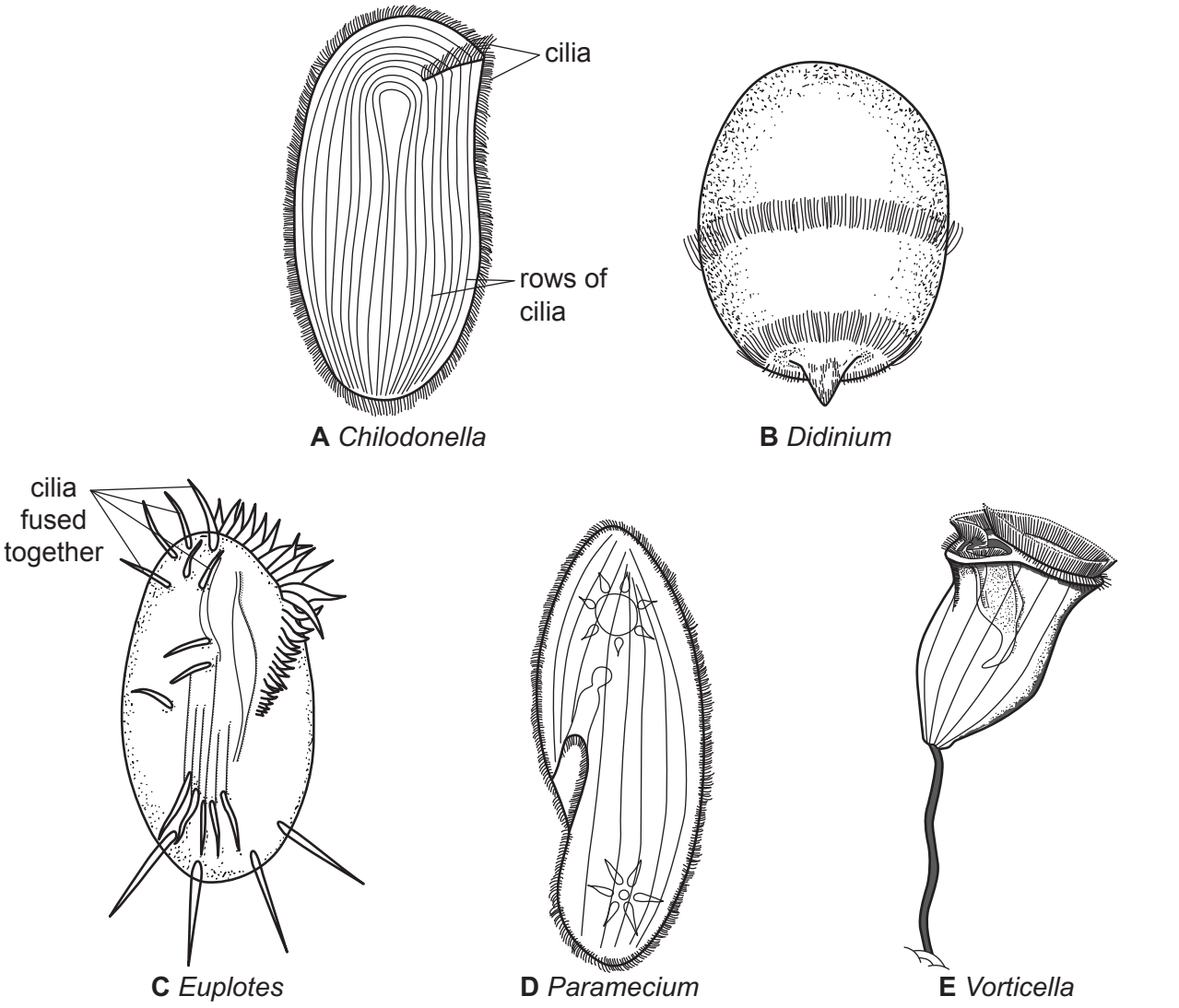

Fig. 5.1

www.dynamicpapers.com

Fig. 5.2 is a dichotomous key to identify the ciliates shown in Fig. 5.1.

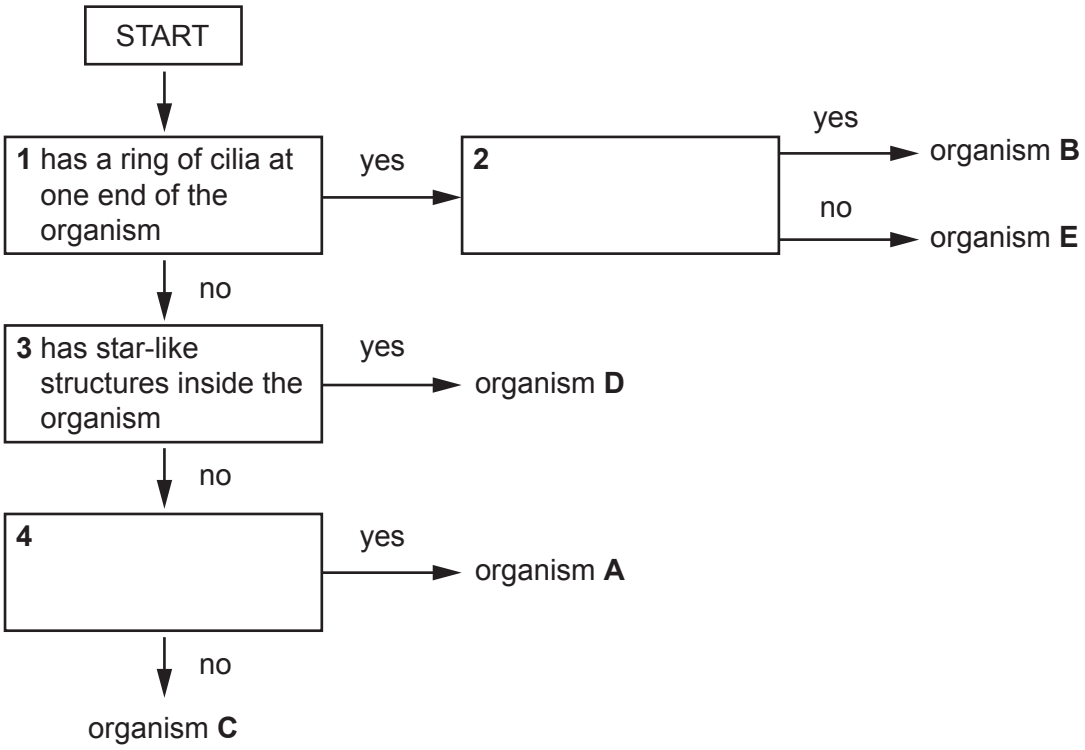

Fig. 5.2

Complete the key in Fig. 5.2 by writing suitable statements:

- for box 2 to distinguish species **B** and **E**
- for box 4 to distinguish species **A** and **C**.

text for box 2 .....

.....

.....

text for box 4 .....

.....

.....

[2]

www.dynamicpapers.com

(c) *Didinium* is a predatory ciliate. A video recording was made of one *Didinium* feeding on a *Paramecium*. Fig. 5.3 shows a sequence of still photographs taken from the video.

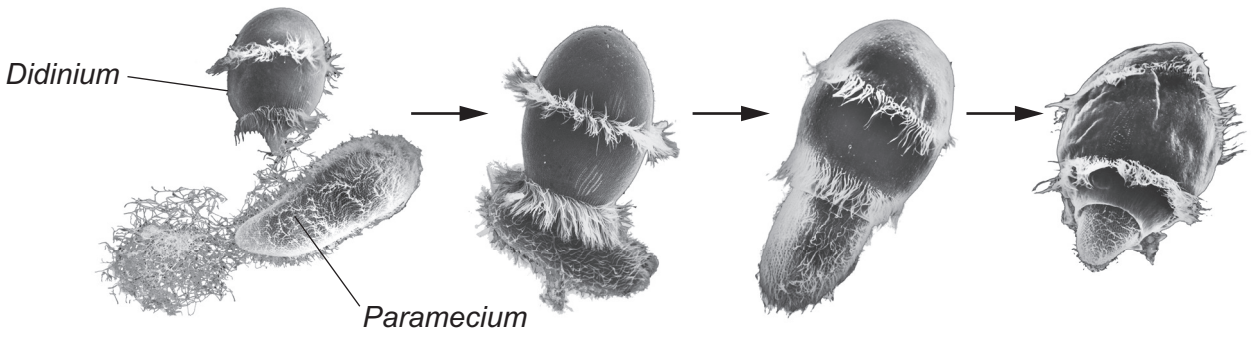

Fig. 5.3

Complete the table by putting a tick (✓) by each characteristic of life that can be seen in the still photographs from the video in Fig. 5.3.

excretion		nutrition	
growth		reproduction	
movement		respiration	

[1]

(d) Fig. 5.4 is a food web for some of the microorganisms in a sewage treatment works.

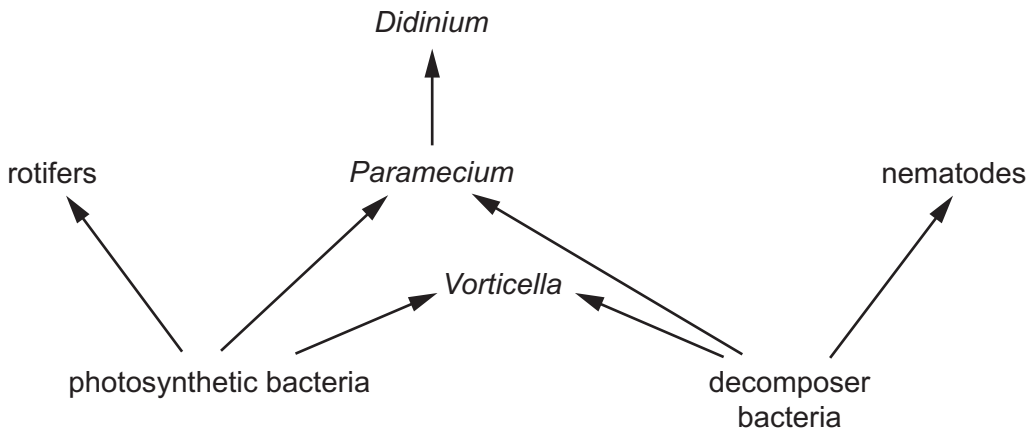

Fig. 5.4

(i) Construct **one** food chain with three trophic levels that use energy derived from the breakdown of sewage. Do **not** draw the organisms.

..... [1]

www.dynamicpapers.com

(ii) The water that passed out of the sewage works was often cloudy with suspended matter.

Scientists discovered that ciliates reduce the cloudiness of water during sewage treatment.

Suggest how the ciliates reduce the cloudiness of the water using the information in Fig. 5.4.

.....

.....

.....

.....

..... [2]

(iii) Explain how sewage treatment reduces the spread of disease.

.....

.....

.....

.....

.....

.....

..... [3]

(iv) Nitrifying bacteria are found in sewage works.

Explain the importance of nitrifying bacteria in the nitrogen cycle.

.....

.....

.....

.....

.....

.....

..... [3]

[Total: 14]

www.dynamicpapers.com

6 Colour blindness is a characteristic that is inherited. Colour blindness is more common in males than in females.

Fig. 6.1 is a pedigree diagram showing the inheritance of colour blindness in a family.

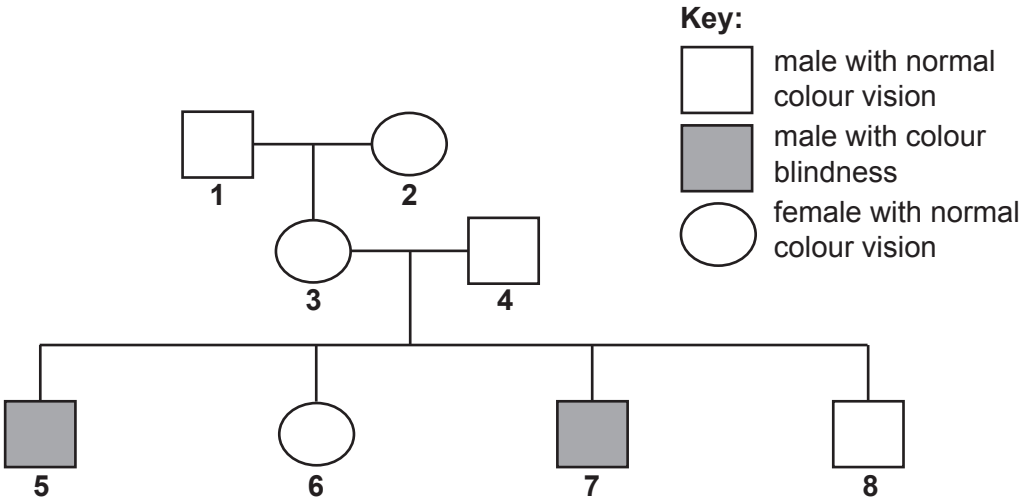

Fig. 6.1

(a) Define the term *inheritance*.

.....

.....

..... [1]

(b) **(i)** Using the symbols **B** and **b**, state the genotypes of individual **5** and individual **8** in the pedigree diagram.

5 .....

8 .....

[3]

www.dynamicpapers.com

(ii) Individual **3** is a carrier of colour blindness because she has one copy of the allele for colour blindness but has normal colour vision.

Describe the evidence from Fig. 6.1 that shows that individual **3** is a carrier.

.....

.....

.....

.....

.....

.....

..... [3]

(iii) There was no history of colour blindness in the parents and grandparents of individuals **1** and **2**.

Suggest how colour blindness first occurred in the family in Fig. 6.1.

.....

.....

.....

.....

..... [2]

[Total: 9]

www.dynamicpapers.com

BLANK PAGE

Permission to reproduce items where third-party owned material protected by copyright is included has been sought and cleared where possible. Every reasonable effort has been made by the publisher (UCLES) to trace copyright holders, but if any items requiring clearance have unwittingly been included, the publisher will be pleased to make amends at the earliest possible opportunity.

To avoid the issue of disclosure of answer-related information to candidates, all copyright acknowledgements are reproduced online in the Cambridge Assessment International Education Copyright Acknowledgements Booklet. This is produced for each series of examinations and is freely available to download at www.cambridgeinternational.org after the live examination series.

Cambridge Assessment International Education is part of the Cambridge Assessment Group. Cambridge Assessment is the brand name of the University of Cambridge Local Examinations Syndicate (UCLES), which itself is a department of the University of Cambridge.

© UCLES 2020